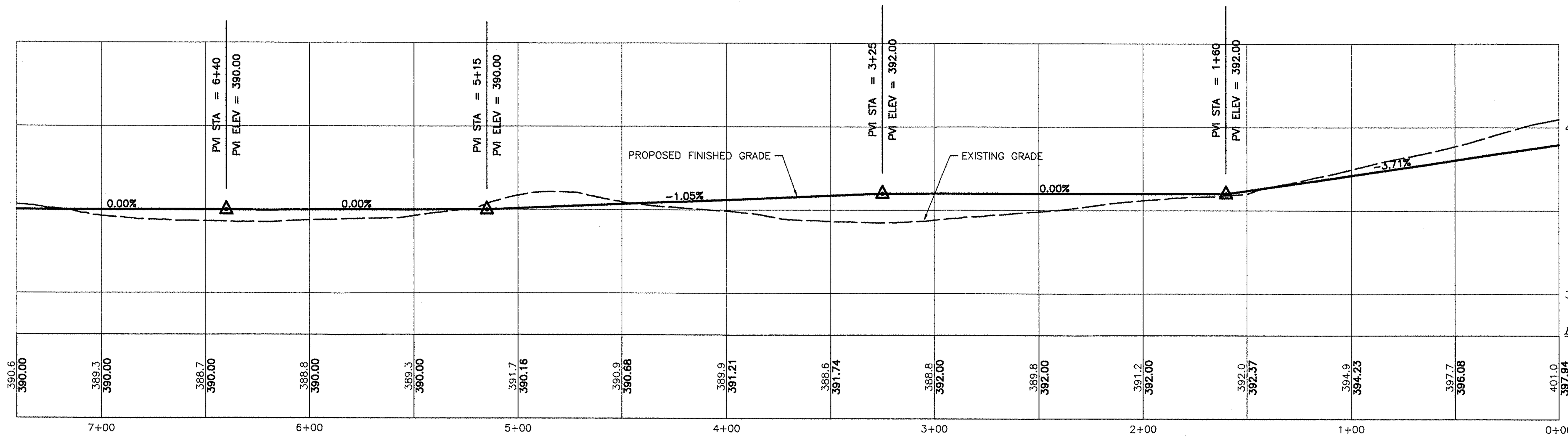

PROFILE - GRAVEL ACCESS ROAD

SCALE HORIZ: 1"=40'
VERT: 1"=10'

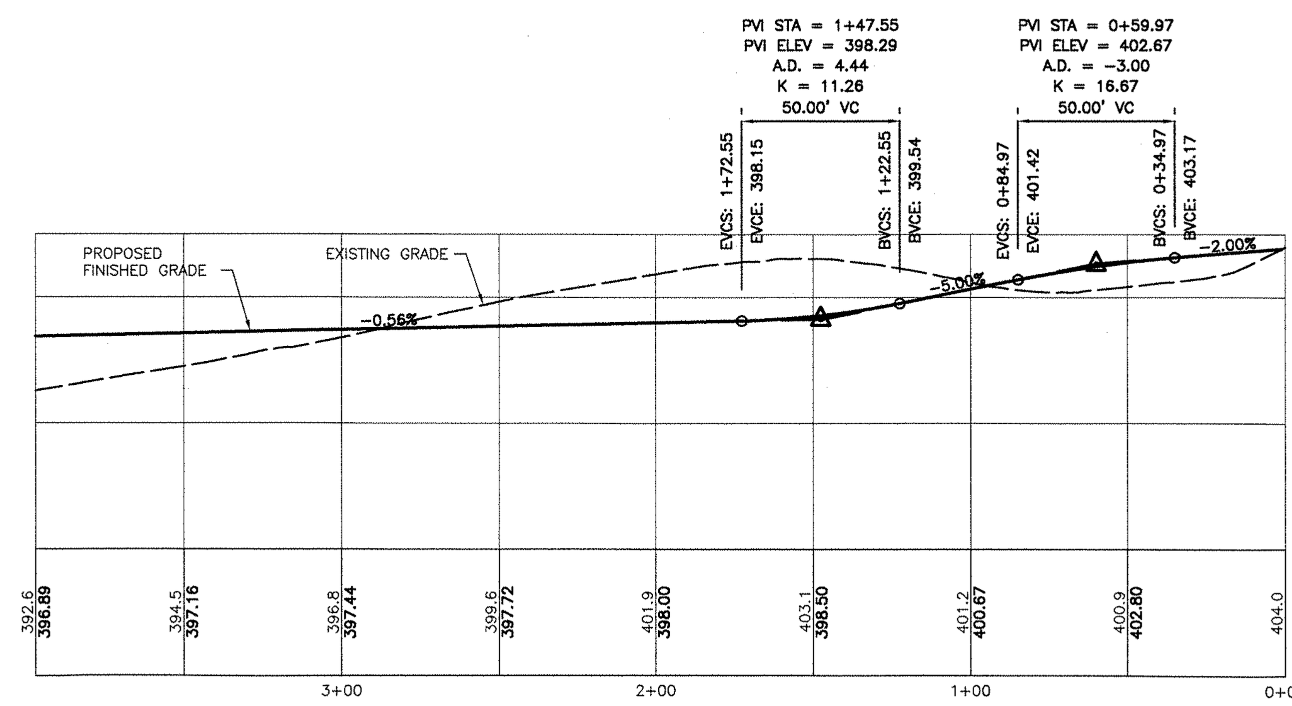

PROFILE - ASPHALT ENTRY ROAD

SCALE HORIZ: 1"=40'
VERT: 1"=10'

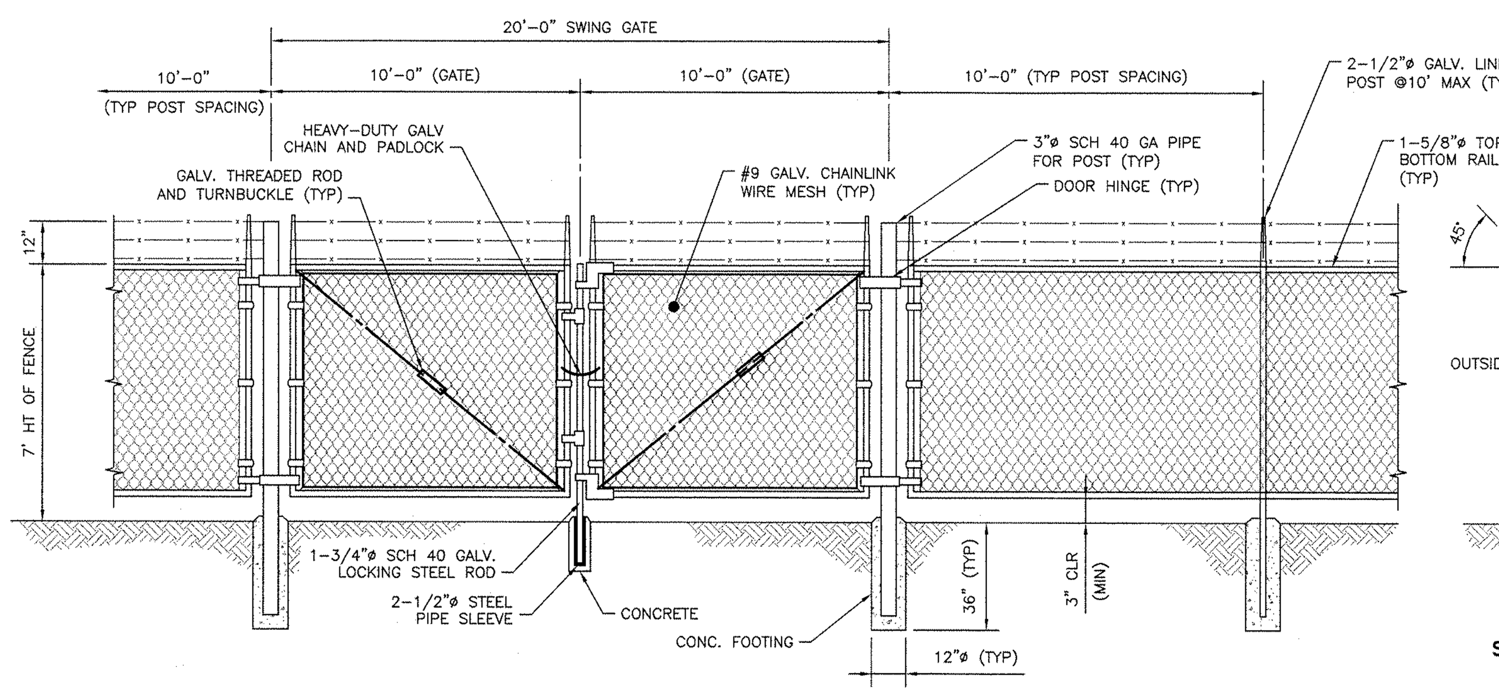

CHAINLINK FENCE AND GATE

NTS

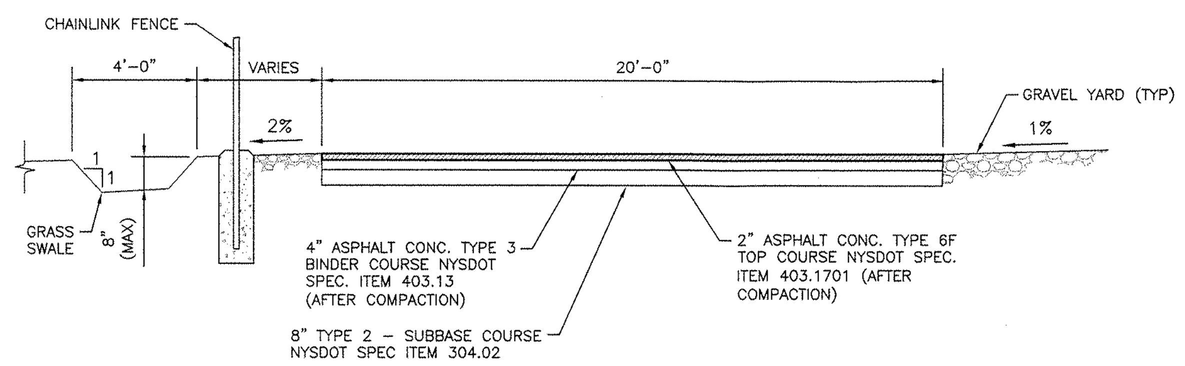

TYPICAL ROAD SECTION

NTS

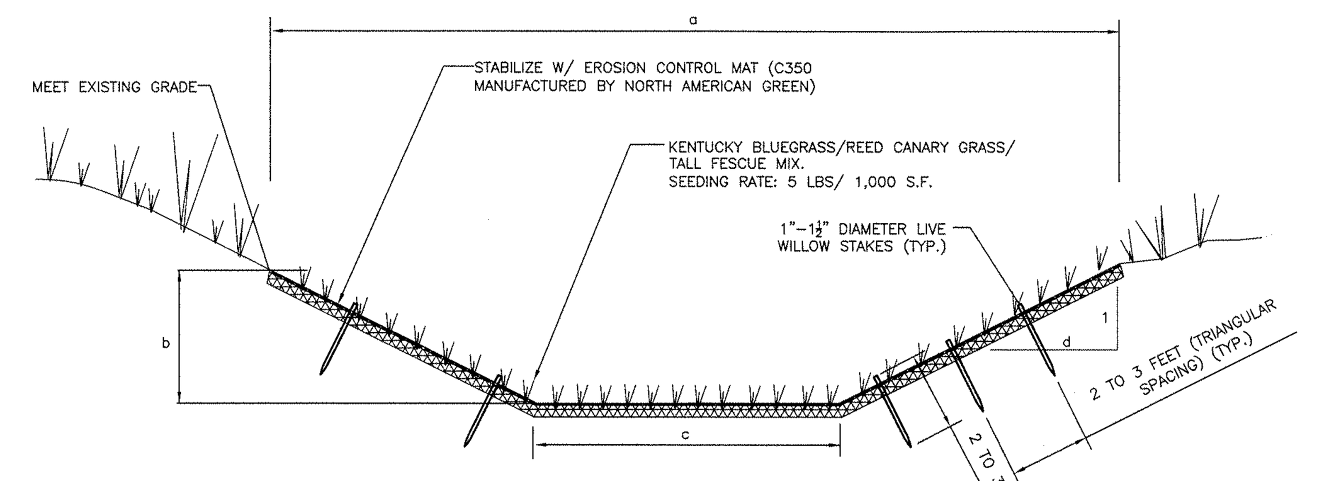

SWALE TYPE	DIMENSIONS			
	a	b	c	d
A	6'	8"	2'	3
B	10'	8"	6'	3
C	6'	8"	4.7'	2
D	12'	12"	6'	3

SEEDING

1. CONVENTIONAL SEEDING SHALL BE PERFORMED BY APPLYING SEED UNIFORMLY BY HAND, CYCLONE (CENTRIFUGAL) SEEDER, DROP SEEDER, DRILL OR CULTIPACKER SEEDER. EXCEPT FOR DRILLED, HYDROSEEDED OR CULTIPACKED SEEDINGS, SEED SHALL BE INCORPORATED INTO THE SOIL WITHIN 24 HOURS OF SEEDBED PREPARATION TO A DEPTH OF 1/4 TO 1/2 INCH, BY RAKING OR DRAGGING. DEPTH OF SEED PLACEMENT MAYBE 1/4 INCH DEEPER ON COARSE TEXTURED SOIL.

2. AFTER SEEDING, FIRMING THE SOIL WITH A CORRUGATED ROLLER WILL ASSURE GOOD SEED-TO-SOIL CONTACT, RESTORE CAPILLARY, AND IMPROVE SEEDING EMERGENCE. THIS IS THE PREFERRED METHOD. WHEN PERFORMED ON THE CONTOUR, SHEET EROSION WILL BE MINIMIZED AND WATER CONSERVATION ON SITE WILL BE MAXIMIZED.

TYPICAL CHANNEL CROSS SECTION

NTS

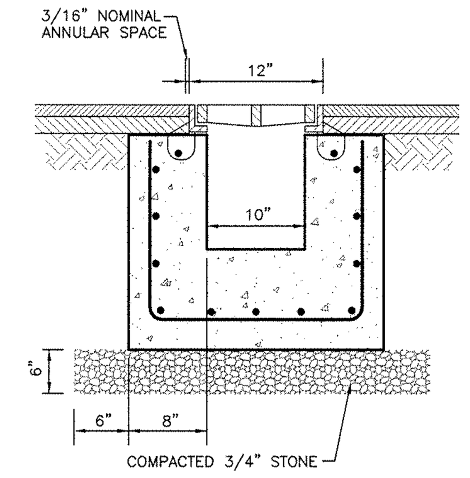

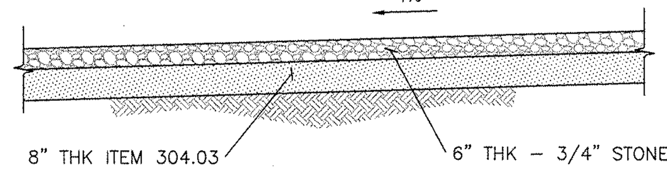

GRAVEL YARD

NTS

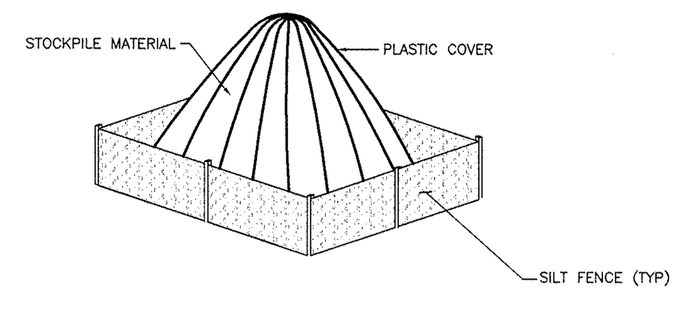

NOTE
STOCKPILE SHALL BE COVERED ENTIRELY BY AN ANCHORED PLASTIC COVER OR SEEDED

STOCKPILE CONTROL DETAIL

NTS

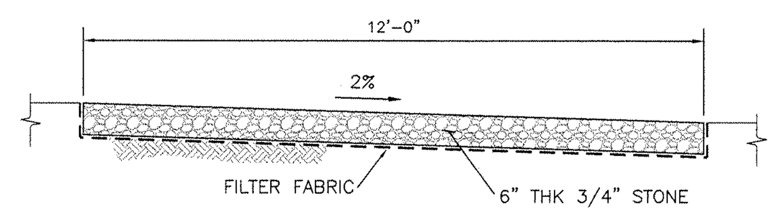

ACCESS DRIVE

NTS

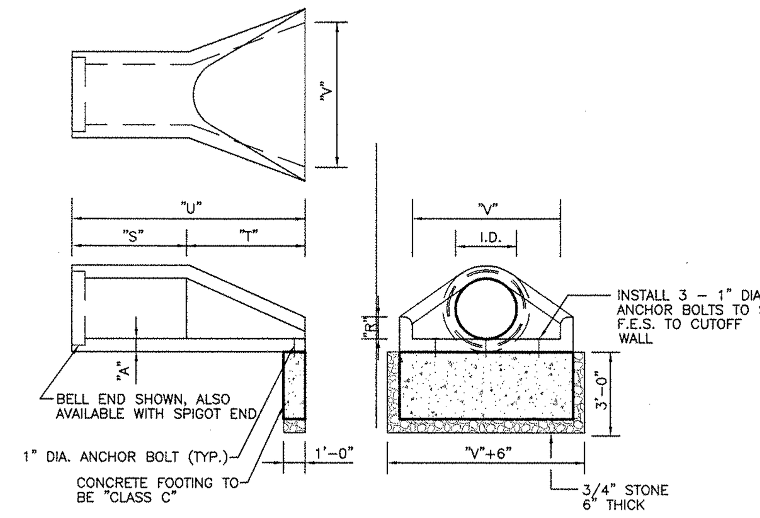

PIPE SIZE												
I.D.	12"	15"	18"	21"	24"	27"	30"	36"	42"	48"	54"	60"
"A"	2"	2.25"	2.5"	2.75"	3"	3.25"	3.5"	4"	4.5"	5"	5.5"	6"
"R"	5"	7.5"	9"		10"		14"		21"	24"	27"	31"
"S"		24"					26"		36"	36"		36"
"T"		24"					30"	36"	60"	60"		60"
"U"			4'-0"				4'-8"	5'-2"		8'-0"		
"V"	24"	28"	34"	40"	48"	54"	60"	72"	78"	84"	90"	96"
WT/FT	360	480	640	860	920	1200	1540	2100	5500	6500	8200	9300

CIRCULAR FLARED END SECTION

NTS

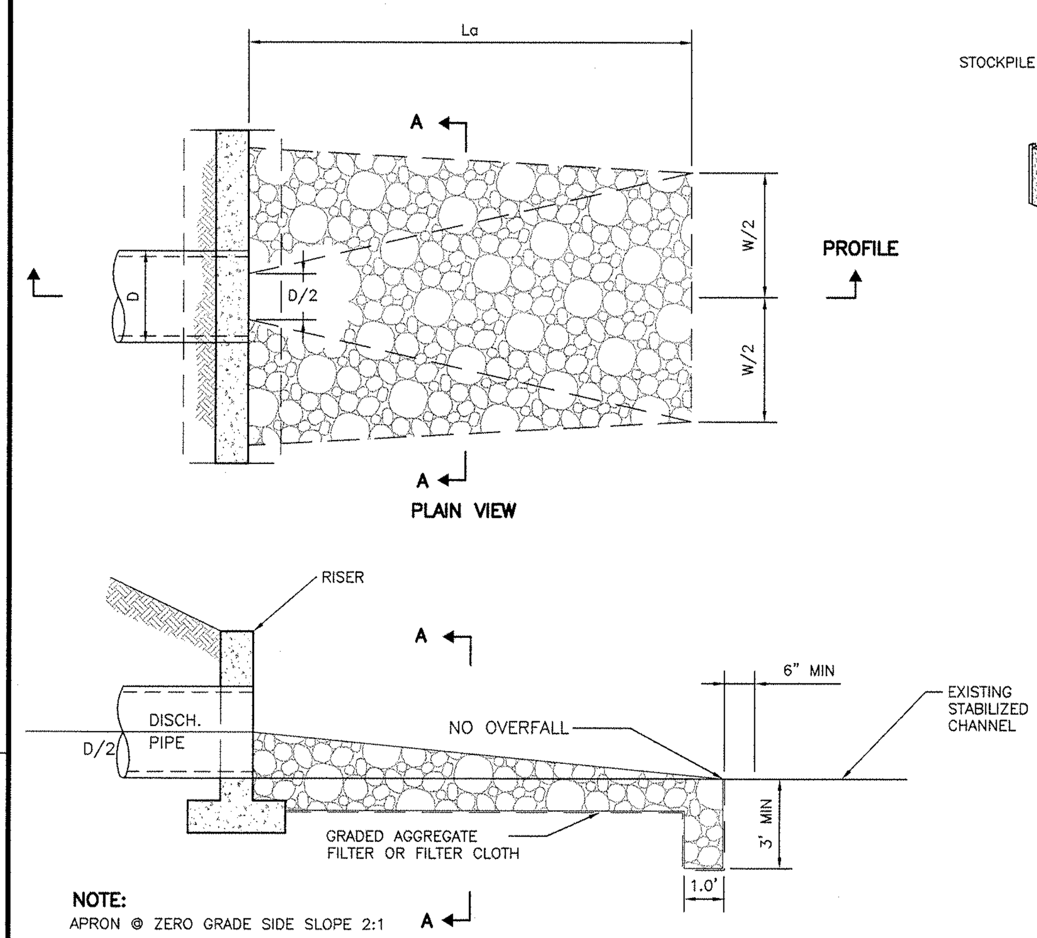

NOTE:
APRON @ ZERO GRADE SIDE SLOPE 2:1

PROFILE VIEW

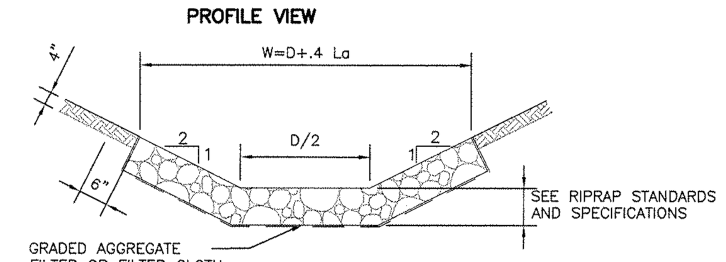

CROSS SECTION A-A

NOTE:
SEE RIPRAP STANDARDS AND SPECIFICATIONS MINIMUM TAILWATER CONDITIONS

RIPRAP OUTLET PROTECTION

NTS

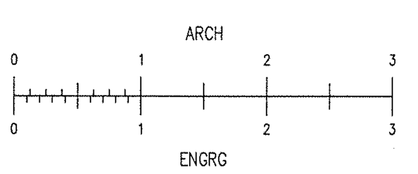

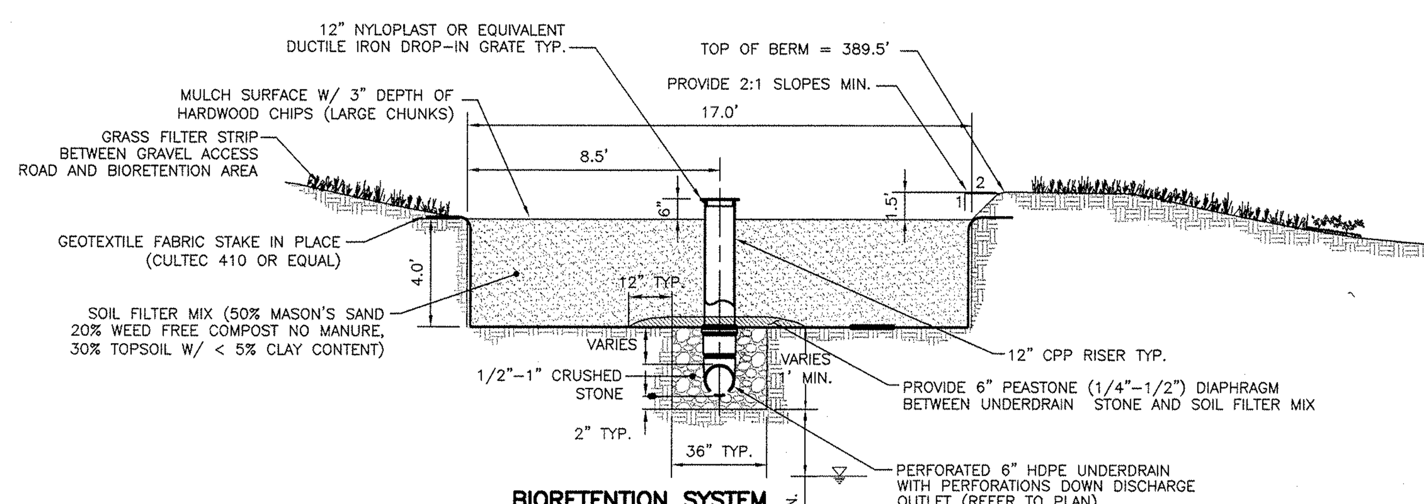

BIORETENTION SYSTEM

(NTS)

CONSTRUCTION SEQUENCE

1. STAKE THE LIMITS AND PROVIDE OFFSETS OF THE PROPOSED BIORETENTION AREA AND SET ACCESSIBLE REFERENCE ELEVATIONS, AS NEEDED.
2. INSTALL EROSION AND SEDIMENT CONTROL MEASURES CONSISTENT WITH OVERALL DEVELOPMENT E&S PLAN.
3. STABILIZE THE GRADING AROUND THE PROPOSED AREA AND DIVERT RUNOFF AWAY FROM THE PROPOSED EXCAVATIONS.
4. EXCAVATE THE BIORETENTION AREA TO THE PROPOSED LINES AND GRADES SHOWN ON THE SITE PLANS, AND SCARIFY THE EXISTING SOIL SURFACES, TAKING CARE NOT TO COMPACT THE IN-SITU SOILS.
5. INSTALL THE UNDERDRAIN SYSTEM AND OVERFLOW STRUCTURES. INSTALL THE FABRIC ON THE SIDEWALLS AND STAKE IN PLACE.
6. BACKFILL THE EXCAVATIONS WITH THE SOIL MIXTURE AS SHOWN ON THE PLANS AND SPECIFIED HEREIN.
7. FINISH GRADING THE SURFACE OF THE BIORETENTION AREA. LEAVE ROOM FOR THREE (3) INCHES OF WOOD CHIP MULCH.
8. PRESOAK THE PLANTING MIXTURE PRIOR TO PLACEMENT OF PLANTING STOCK. ALLOW THE SOIL MIXTURE TO SETTLE NATURALLY BEFORE PLACING THE PLANTS.
9. PLANT VEGETATION WITHIN THE BIORETENTION AREA AS SPECIFIED IN THE PLANTING NOTES AND LANDSCAPE PLANS (PROVIDED BY OTHERS).
10. MULCH THE SURFACE WITH NOT MORE THAN THREE (3) INCHES OF SINGLE PASS, HARDWOOD MULCH. REMOVE TEMPORARY SEDIMENT CONTROLS AND ANY ENTRANCE BLOCKS TO THE BIORETENTION AREA AFTER ACCEPTANCE BY THE DESIGN PROFESSIONAL AND THE LOCAL REGULATORY AUTHORITY.

BIORETENTION AREA

TREATMENT OF STORMWATER RUNOFF IS ACCOMPLISHED IN PROPOSED BIORETENTION AREA BY MEANS OF INFILTRATION USING PLANTING SOILS. PLANTINGS OF NATIVE VEGETATION WITHIN THE BIORETENTION AREA MAINTAIN THE INFILTRATIVE CAPACITY OF THE SYSTEM, PROVIDE SOIL STABILIZATION, AND THE ATTENUATE NUTRIENTS AND OTHER CONTAMINANTS. MANAGEMENT ACTIONS INCLUDE THE FOLLOWING:

1. ANNUAL INSPECTION AND REPAIR OF OR REPLACEMENT OF TREATMENT COMPONENTS.
2. TWICE PER YEAR (SPRING AND FALL) INSPECT TREES AND SHRUBS TO EVALUATE HEALTH, REMOVE AND REPLACE DEAD OR DYING PLANTS, AND PRUNE DISEASED OR BROKEN PLANTS.
3. TREATMENT OF DISEASED VEGETATION WITH APPROPRIATE LOW-TOXICITY CHEMICALS (HERBICIDES, PESTICIDES).
4. WEED ANNUALLY AND PRUNE SHRUB VEGETATION UNTIL VEGETATION IS ESTABLISHED TO IMPROVE APPEARANCE.
5. REPLACE MULCH TO COVER EXPOSED SOIL AREA. REMOVE AND REPLACE MULCH EVERY TWO TO THREE YEARS. MULCH DEPTH NOT TO EXCEED THREE (3) INCHES.
6. SAMPLE SOIL FOR FERTILITY EVERY THREE YEARS. ADDITION OF LIMESTONE ONE OR TWO TIMES PER YEAR TO MAINTAIN PROPER PH IS RECOMMENDED. FIELD OR LABORATORY TESTING FOR PH IS ACCEPTABLE.
7. CHECK BASIN FOR SEDIMENT BUILD UP AND REMOVE SEDIMENT IF GREATER THAN ONE INCH.
8. CHECK BASIN AFTER STORM EVENT TO ENSURE THAT IT DEWATERS PROPERLY (DRAINS WITHIN 48HRS).
9. CHECK OUTLET OVERFLOW FOR EVIDENCE OF BLOCKAGE AND SOIL EROSION AT DISCHARGE POINTS. CLEAN BLOCKAGES AS REQUIRED AND STABILIZE EROSIVE AREAS AS NEEDED.

GENERAL CONSTRUCTION SPECIFICATIONS

1. SOILS

SOIL FILTER MIXTURE – A SOIL MIXTURE OF 50–60% MASONS SAND (ASTM C-33) WITH GRAIN SIZE OF 0.02 –0.04", 20–30% WEED FREE LEAF COMPOST WITHOUT MANURE, AND 20–30% WEED FREE TOPSOIL WITH LESS THAN 5% CLAY SHALL BE USED TO FILL THE BIORETENTION EXCAVATION. THE SOIL SHALL BE FREE OF STONES, STUMPS, ROOTS OR SIMILAR OBJECTS LARGER THAN 2". NO OTHER MATERIALS SHALL BE MIXED IN WITH THE SOIL THAT MAY BE HARMFUL TO PLANT GROWTH OR PROVE A HINDRANCE TO THE PLANTING OR MAINTENANCE OPERATIONS. SOIL MIXTURE DEPTH SHALL BE 24" DEEP.

PRIOR TO PLACEMENT OF THE SOIL MEDIUM A CERTIFICATE FROM AN ACCREDITED LABORATORY MUST BE SUBMITTED TO THE DESIGN PROFESSIONAL ATTESTING TO THE SOIL'S PHYSICAL PROPERTIES (SIEVE ANALYSIS), CHEMICAL NATURE (PH AND FERTILITY) AND WEED FREE NATURE (GROW-OUT TEST). WEED FREE MEANS THE SOIL MEDIUM DOES NOT CONTAIN PLANTS OR SEEDS OF BERMUDA GRASS, QUACKGRASS, JOHNSON GRASS, MUGWORT, NUTSEDGE, POISON IVY, CANADIAN THISTLE, TEARTHUMB, OR OTHER NOXIOUS OR INVASIVE WEEDS AS DEFINED BY THE MOST RECENT LISTING PUBLISHED BY THE STATE OF NEW YORK.

THE EXCAVATED SOIL SURFACE SHALL BE SCARIFIED AND THE SOIL MIXTURE SHALL BE PLACED IN 8–12" LIFTS TAKING CARE NOT TO COMPACT THE EXISTING SOIL OR THE SOIL MIXTURE. LIFTS MAY BE LIGHTLY WATERED TO ENCOURAGE NATURAL COMPACTION. ANTICIPATE 20% COMPACTION OF THE SOIL MIXTURE FOLLOWING NATURAL COMPACTION. DEPRESSIONS GREATER THAN 6" BELOW THE FINISHED SURFACE OF THE AREA CAN BE FILLED WITH ADDITIONAL SOIL MIXTURE AND COVERED WITH 3" (MAXIMUM) LAYER OF "SINGLE PASS" HARDWOOD CHIP MULCH.

SOIL PH: SOIL PH RANGE SHALL BE 6.5 – 6.9.

ORGANIC MATTER CONTENT: 1.5–3.0 % BY DRY WEIGHT.

2. UNDERDRAIN

PERFORATED HDPE PIPE SURROUNDED BY WASHED STONE SHALL BE PLACED BENEATH THE BIORETENTION AREA. ALL DRAINS SHALL CONNECT TO THE DRAINAGE SYSTEM AND SHALL DISCHARGE AS SHOWN ON SITE PLAN.

3. PEA GRAVEL DIAPHRAGM

A PEA GRAVEL DIAPHRAGM, SIX (6) INCHES (MINIMUM) IN DEPTH, SHALL BE PLACED OVER THE UNDERDRAIN AND EXTEND ONE (1) FOOT TO EITHER SIDE OF THE EDGE OF THE DRAIN. PEA GRAVEL SHALL BE 1/4–1/2" DIAMETER.

4. FILTER FABRIC

FILTER FABRIC SHALL BE A NON-WOVEN TYPE (ASTM D-4491) HAVING A MINIMUM FLOW RATE OF 125 GALS/MIN/FT2. MULLEN BURST STRENGTH OF 400 PSI (ASTM D-1117), TENSILE STRENGTH OF 300 LBS.(ASTM D-1682); 0.08" THICK, E.O.S. #80. THE FABRIC SHALL BE PRE-APPROVED BY THE DESIGN PROFESSIONAL PRIOR TO USE. FABRIC SHALL BE PLACED ON THE SIDEWALLS (FROM SUBGRADE LEVEL AND OVER THE STONE LAYER). FABRIC SHALL BE OVERLAPPED BY 1-FOOT (MINIMUM) AT THE ENDS AND STAKED IN PLACE DURING CONSTRUCTION AT THE TURNED UP SURFACES. EXCESS FABRIC MAY BE REMOVED BY CUTTING ALONG THE DESIRED ELEVATIONS.

5. MULCH

ONLY FRESH, SINGLE PASS, SHREDDED HARDWOOD MULCH SHALL BE USED TO MULCH THE SURFACE OF THE BIORETENTION AREA. MULCH SHALL BE PLACED TO A MAXIMUM HEIGHT OF 3" OVER THE ENTIRE SURFACE OF THE BIORETENTION AREA'S FINISHED SURFACE AFTER PLANTS ARE INSTALLED. MULCH SHALL BE FREE OF FOREIGN MATERIALS INCLUDING PLANT MATERIALS AND WELL AGED (STOCKPILED FOR GREATER THAN 12 MONTHS). PROTECT AND LIFT GROUND COVER PLANTS TO PLACE THE MULCH MATERIAL BENEATH AND IN BETWEEN THE PLANTINGS.

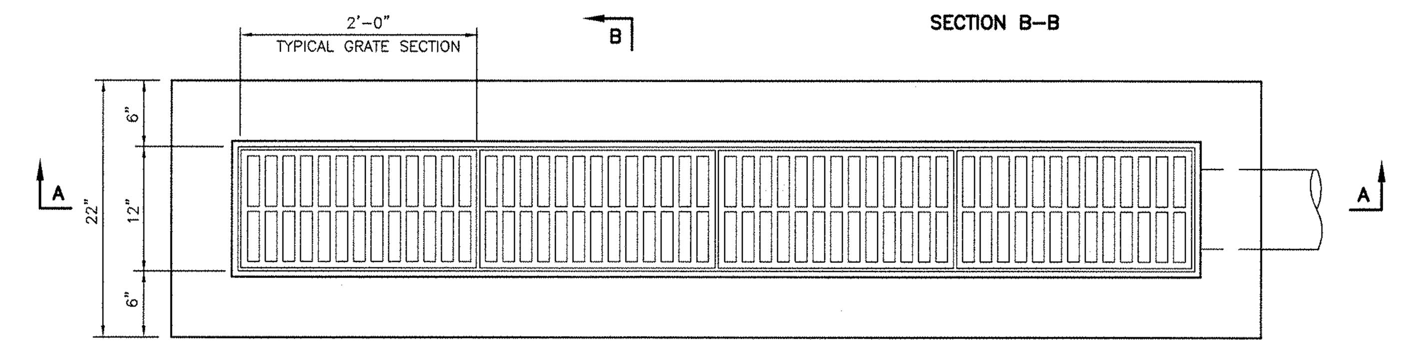

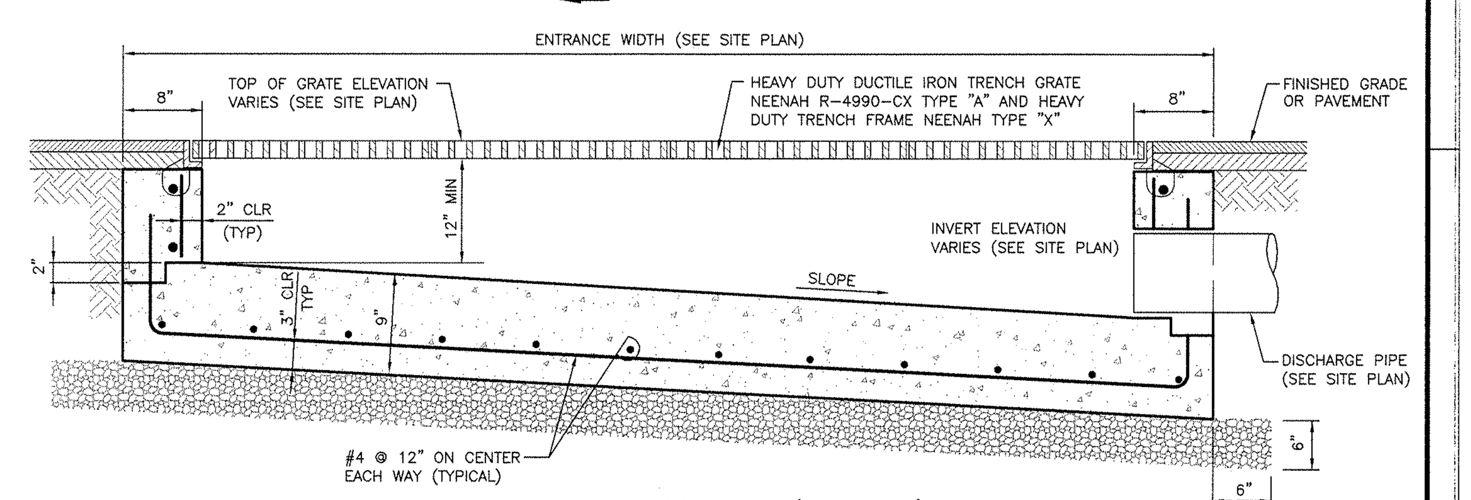

TRENCH DRAIN DETAIL

NTS

REV	REVISION	DWN	DES	CHKD	DATE
C	FEIS REVISIONS	JYP	MF	MF	4/27/12
B	RESPONSE TO DEIS COMMENTS	JP	JP	MF	4/04/12

ORANGE AND ROCKLAND UTILITIES, INC.
PEARL RIVER NEW YORK

HARTLEY ROAD SUBSTATION

ROAD PROFILES AND CONSTRUCTION DETAILS

CMX
CMX ENGINEERING, SURVEY & LANDSCAPE ARCHITECTS, PC OF NEW YORK
AN AFFILIATE OF BIRDSALL SERVICES GROUP

W. CHARLES UTSCHIG, JR.
PROFESSIONAL ENGINEER, N.Y. LIC. NO. 62303

ENGINEERING REVIEW

DEPT.	SIGNATURE	DATE
CIVIL/SURVEY	[signature]	4/30/12
TELECOM/NET.		
TRANS & SUB.		
RELAY		

APPROVED [signature] DATE 4/30/12

- ☐ INFORMATION
- ☐ COMMENTS
- ☐ BID
- ☐ CONSTRUCTION
- ☒ PERMIT

DWN JYP | DES FM | CHKD WCU | DATE 4 30 12
DESIGN REVIEW [signature]

SCALE	FILE NO.	DRAWING NUMBER			SHEET	REV.
AS SHOWN		K	F	6427	8 OF 12	C

REDUCTION RATIO

ORFRMF.DWG
DATE: 00 TIME: 000