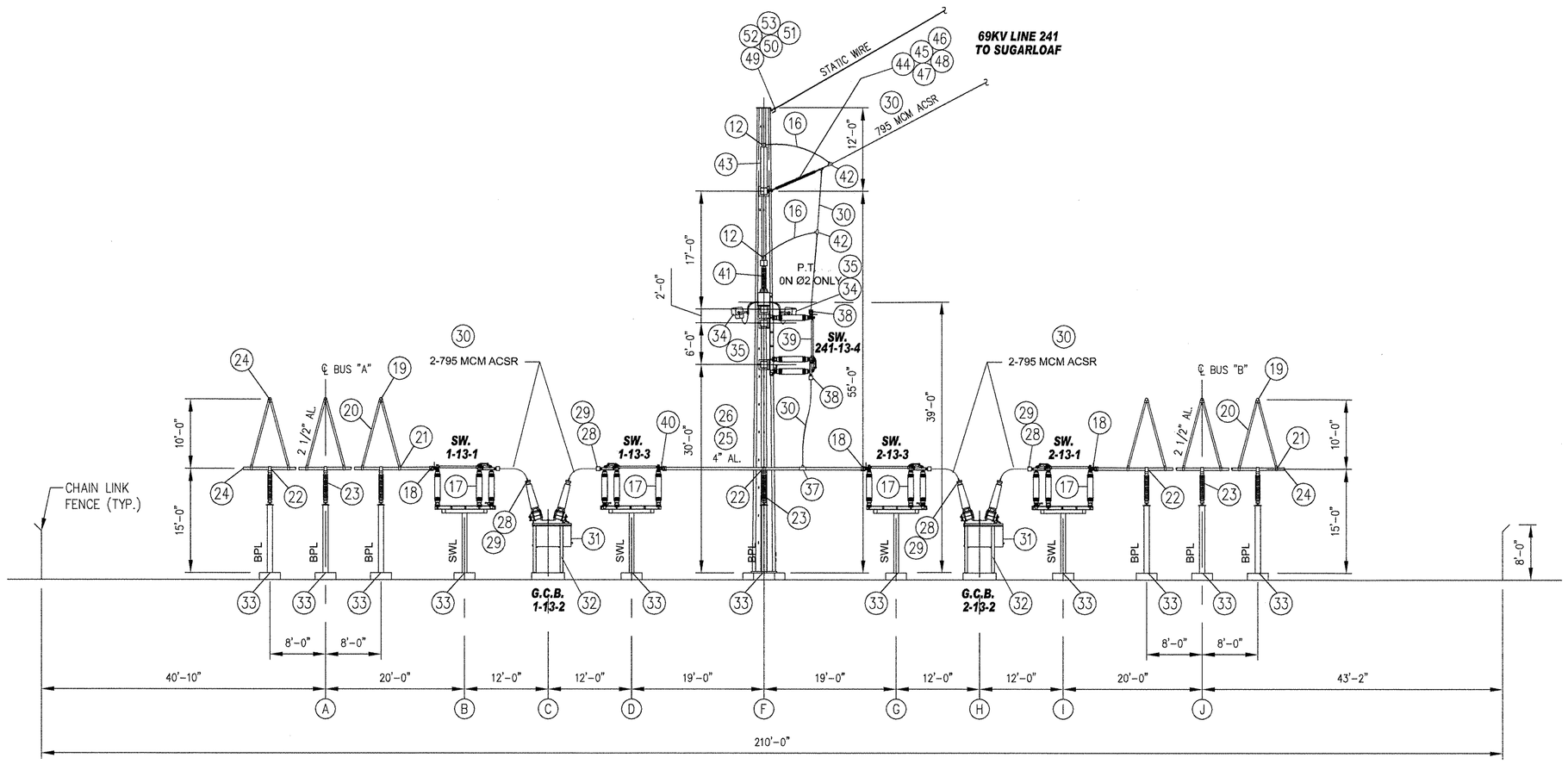

SECTION A-A
SCALE: 3/32" = 1'-0"

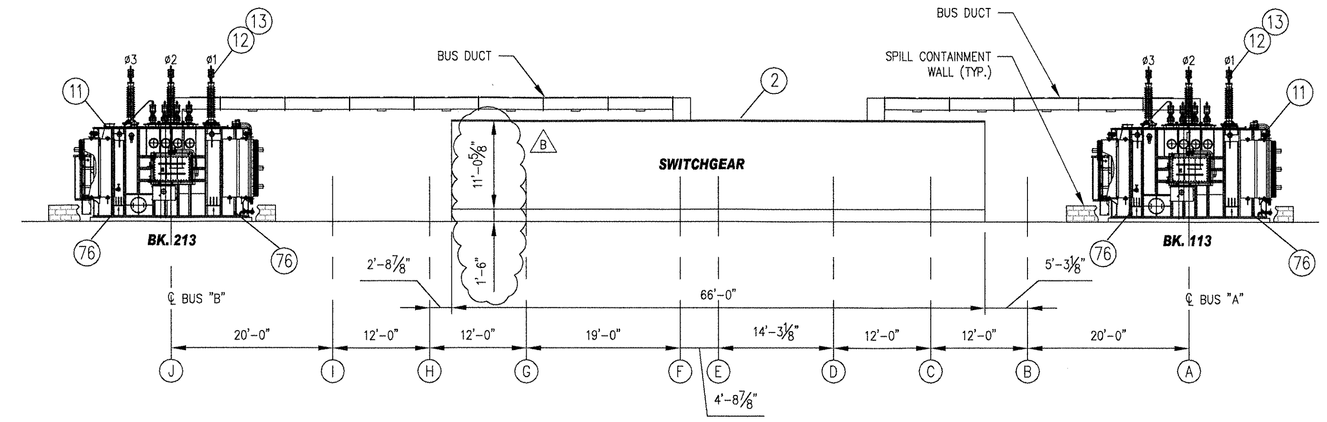

SECTION B-B
SCALE: 3/32" = 1'-0"

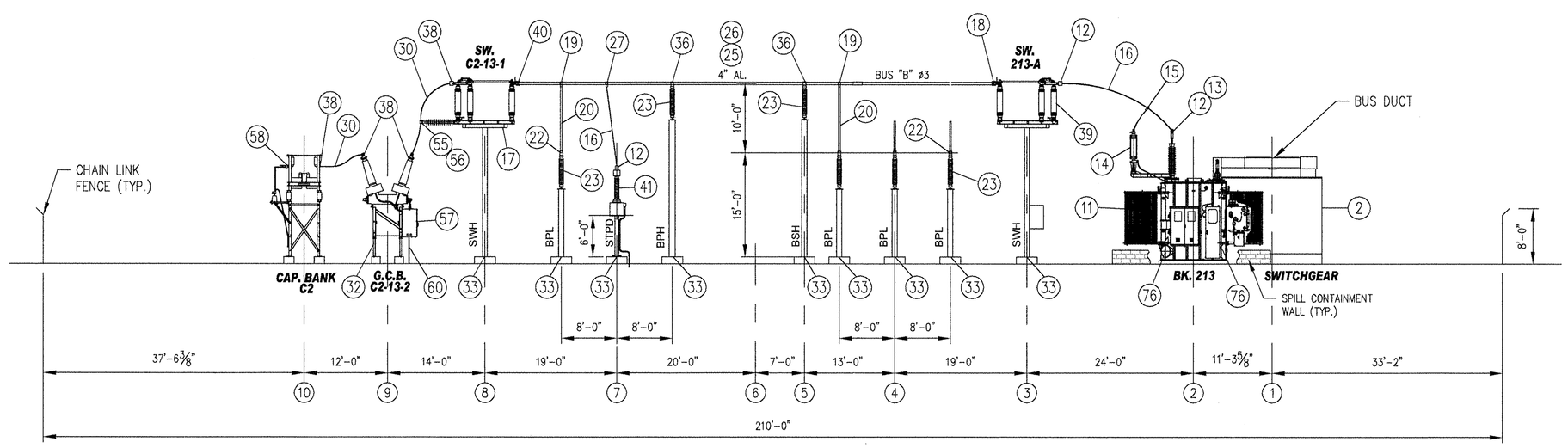

SECTION C-C
SCALE: 3/32" = 1'-0"

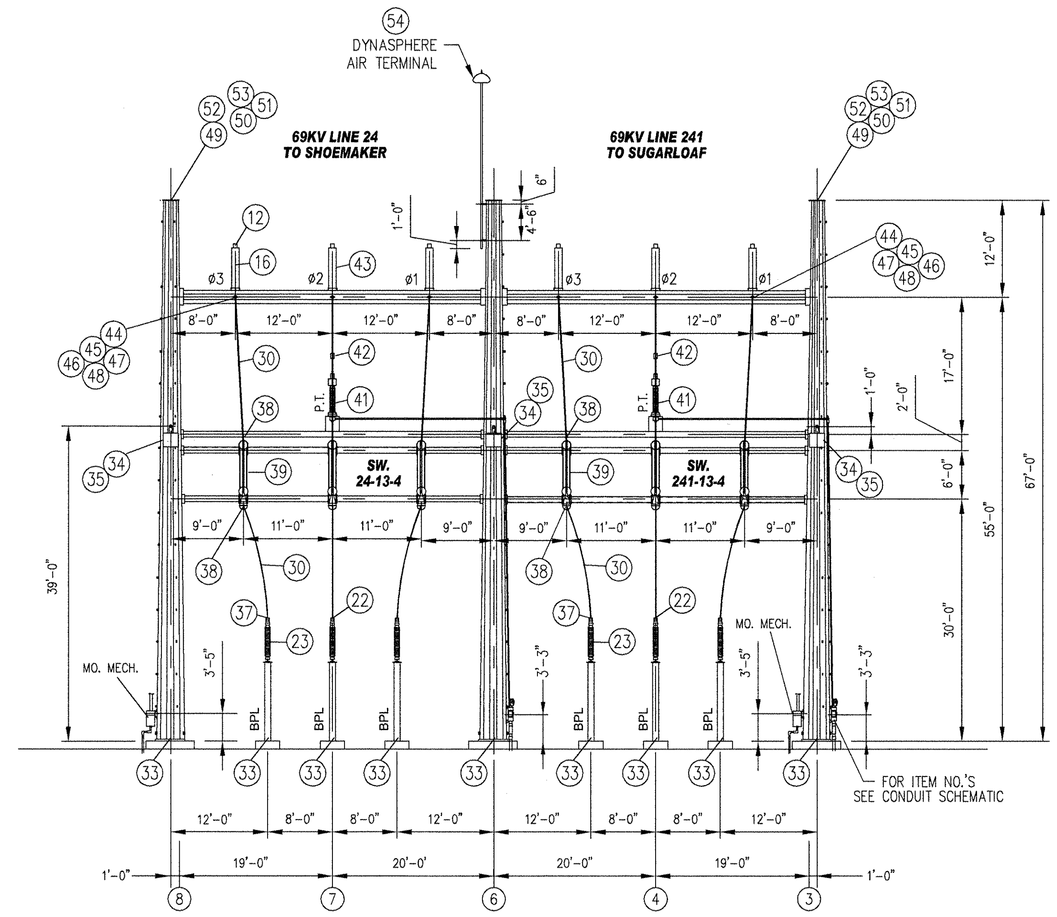

SECTION D-D
SCALE: 3/32" = 1'-0"

LEGEND:

SWH HIGH BUS SWITCH
SWL LOW BUS SWITCH
BPL LOW BUS SUPPORT
BPH HIGH BUS SUPPORT
BSH HIGH BUS SUPPORT
STPD BUS POTENTIAL TRANSFORMER
Ø# PHASE NUMBER

REV	REVISION	DWN	DES	CHKD	DATE
B	REMOVED ITEM NUMBERS & DESCRIPTIONS, ADDED SWITCHGEAR HEIGHT DIMENSIONS PER W.R. # 09016C	J.M.	—	—	4/30/12

ORANGE AND ROCKLAND UTILITIES, INC.
PEARL RIVER NEW YORK

HARTLEY ROAD SUBSTATION

ELECTRICAL ELEVATIONS

ENGINEERING REVIEW		
DEPT.	SIGNATURE	DATE
CIVIL/SURVEY		4/30/12
TELECOM/MET.		
TRANS & SUB.		4/30/12
RELAY		

DWN J.M./H.S. DES CHKD
DESIGN REVIEW DATE 4/30/12

APPROVED: DATE 4/30/12
☒ PERMIT
☐ BID
☐ CONSTRUCTION
☐ RECORD
☐ ____

SCALE	STATION NO.	DRAWING NUMBER			SHEET	REV.
3/32" = 1'-0"	0013	K	F	6427	11 OF 12	B

ARCH 0 1 2 3
ENGRG 0 1 2 3

I:\Tsdd_WORKREQ\CIVIL\Hartley\09017C\Hartley Road Substation - NJ Turl Site - TB JMK\6427S11.DWG, 4/30/2012 1:04 1:05 PM