SITE PLAN APPROVAL DRAWINGS

HARTLEY ROAD SUBSTATION

TOWN OF GOSHEN
ORANGE COUNTY
STATE OF NEW YORK

LEGEND AND ABBREVIATIONS

EXISTING	PROPOSED	DESCRIPTION
		TREE REMOVAL
		TREE PROTECTION
	B-1	BORING
	SPOT ELEV	SPOT ELEVATION
		VALVE
		HYDRANT WITH VALVE
		WATER SERVICE VALVE
	SOV	SHUT OFF WATER VALVE
	GV	GAS VALVE
		LIGHTPOLE
		UTILITY POLE
		FIELD INLET BASIN
D	D	DRAINAGE MANHOLE
S	S	SANITARY MANHOLE
E	E	ELECTRICAL MANHOLE
		END SECTION
		HAYBALES
		INLET PROTECTION
		PROPERTY LINE
		GUARD RAILING
X	X	FENCE
230	250	MAJOR CONTOUR
232	251	MINOR CONTOUR
		RETAINING WALL
		STONEWALL
W	W	WATER MAIN PIPELINE
S	S	SANITARY PIPELINE
G	G	GAS LINE
E	E	ELECTRICAL LINE
		DRAINAGE PIPELINE
		SILT FENCE
	TD	TEMPORARY DIKE/DITCH
D	D	DIKE/DITCH
		UNDER DRAIN
		CHECK DAM
	CF	CONSTRUCTION FENCE
SW	SW	SWALE

ABBREVIATIONS

AC	ACRES
AD	ALGEBRAIC DIFFERENCE
BC	BOTTOM OF CURB
BF	BASEMENT FLOOR
BVCE	BEGIN VERTICAL CURVE ELEVATION
BVCS	BEGIN VERTICAL CURVE STATION
BW	BOTTOM OF WALL
CB	CATCH BASIN
CIP	CAST IN PLACE
CLR	CLEARANCE
CMP	CORRUGATED METAL PIPE
CO	CLEANOUT
CTGE	CABLE, TELEPHONE, GAS & ELECTRIC
DI	DRAIN INLET
DIP	DUCTILE IRON PIPE
DMH	DRAINAGE MANHOLE
EL	ELEVATION
ES	END SECTION
EVCE	END VERTICAL CURVE ELEVATION
EVCS	END VERTICAL CURVE STATION
EXIST	EXISTING
FI	FIELD INLET
FF	FINISHED FLOOR
GA	GAUGE
GF	GROUND FLOOR
HC	HANDICAP
HDPE	HIGH-DENSITY POLYETHYLENE
HORIZ	HORIZONTAL
HP	HIGH POINT
HYD	HYDRANT
INV	INVERT
K	CURVE COEFFICIENT
LF	LINEAR FEET
LP	LOW POINT
LSE	LOW SEWER ELEVATION
MAX	MAXIMUM
MIN	MINIMUM
NEC	NECESSARY
NO	NUMBER
NTS	NOT TO SCALE
OS	OUTLET STRUCTURE
PC	POINT OF CURVATURE
PERF	PERFORATED
PROP	PROPOSED
PT	POINT OF TANGENT
PVC	POLYVINYL CHLORIDE
PVI	POINT OF VERTICAL INFLECTION
RCP	REINFORCED CONCRETE PIPE
RI	RISER INLET
SF	SQUARE FEET
SHT	SHEET
SMH	SANITARY MANHOLE
STA	STATION
TC	TOP OF CURB
TW	TOP OF WALL
TYP	TYPICAL
UP	UTILITY POLE
VC	VERTICAL CURVE
VERT	VERTICAL
VIF	VERIFY IN FIELD
WV	WATER VALVE
YR	YEAR

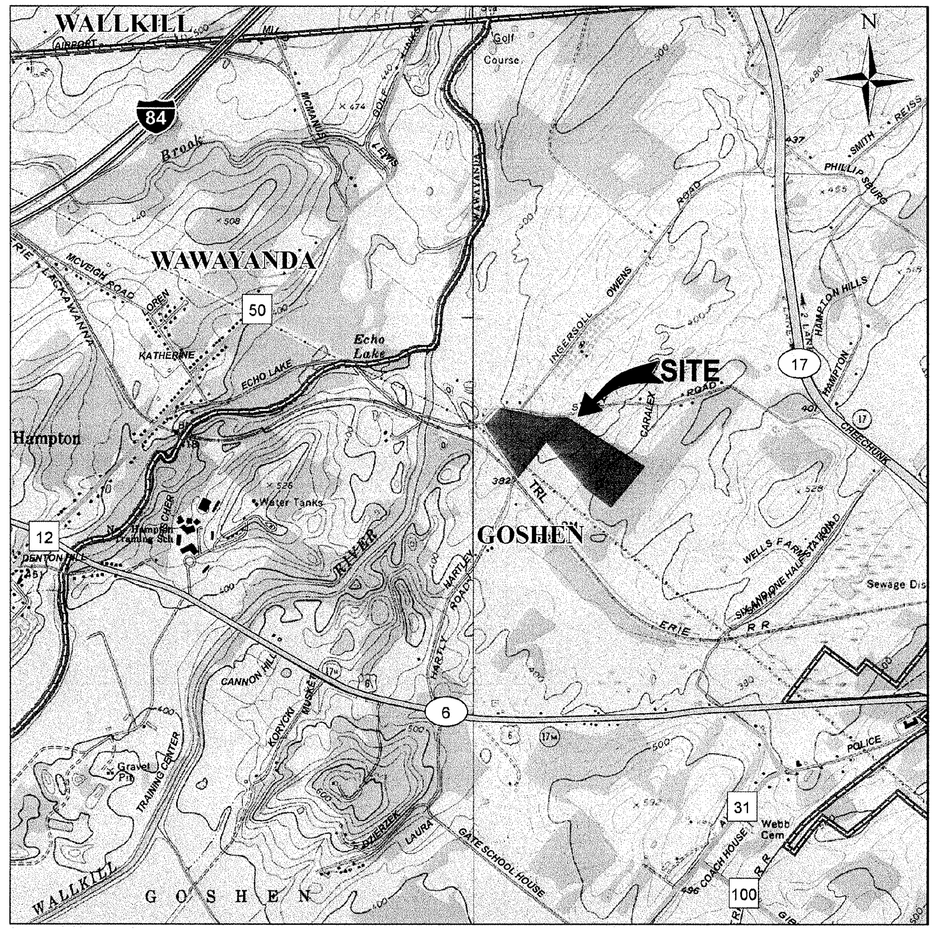

VICINITY MAP
SCALE 1"=2,000'

DRAWING INDEX

SHEET NO.	DRAWING TITLE
1 of 12	TITLE SHEET
2 of 12	EXISTING CONDITIONS AND DEMOLITION PLAN
3 of 12	WETLAND DELINEATION PLAN
4 of 12	SITE PLAN
5 of 12	LAYOUT AND UTILITY PLAN
6 of 12	GRADING PLAN
7 of 12	EROSION, SEDIMENT CONTROL AND CONSTRUCTION PHASING PLAN
8 of 12	ROAD PROFILES AND CONSTRUCTION DETAILS
9 of 12	CONSTRUCTION DETAILS
10 of 12	ELECTRICAL PLAN
11 of 12	ELECTRICAL ELEVATIONS
12 of 12	PLANTING PLAN

DEVELOPED BY:

ORANGE AND ROCKLAND UTILITIES, INC.
ONE BLUE HILL PLAZA
PEARL RIVER NY 10965
(845) 577-3761

ARCH 0 1 2 3
ENGRG 0 1 2 3
REDUCTION RATIO

REV	REVISION	DWN	DES	CHKD	DATE

ORANGE AND ROCKLAND UTILITIES, INC.
PEARL RIVER NEW YORK

CMX
CIVIL ENGINEERING, SURVEY & LAND DEVELOPMENT CONSULTANTS, STATE OF NEW YORK
AN AFFILIATE OF ROCKLAND ENGINEERING

STATE OF NEW YORK · W. CHARLES UTSCHIG, JR. · LICENSED PROFESSIONAL ENGINEER · No. 62303
W. CHARLES UTSCHIG, JR.
PROFESSIONAL ENGINEER, NY LICENSE No. 62303

ENGINEERING REVIEW		
DEPT.	SIGNATURE	DATE
CIVIL/SURVEY	M. Hernandez	11/21/11
TELECOM/MET.		
TRANS & SUB.	A. Reynoso	11/21/11
RELAY		

APPROVED BY: DATE
☐ INFORMATION
☐ COMMENTS
☐ BID
☐ CONSTRUCTION
☒ PERMIT

HARTLEY ROAD SUBSTATION

TITLE SHEET

DWN	DES	CHKD
JYP	MF	WCU
DESIGN REVIEW		DATE 08/31/11

SCALE	FILE NO.	DRAWING NUMBER			SHEET	REV.
NONE		K	F	6427	1 OF 12	A

ORFRMF.DWG
DATE: 00 TIME: 000

EXISTING PAVEMENT TO BE SAWCUT FOR NEW DISTRIBUTION LINES

OFFSITE LIMIT OF DISTRUBANCE (A=0.732A)

OUTLINE OF PROPOSED ROADWAY

ON-SITE LIMIT OF DISTURBANCE (A=6.62 AC)

SECTION OF EXIST. WALL TO BE REMOVED TO ALLOW 135 FOR PIPE INSTALLATION

SECTION OF EXIST. WALL TO BE REMOVED AS REQUIRED TO ALLOW FOR TRANSMISSION ACCESS

EXIST. TREE TO BE REMOVED (TYP)

EXIST. TREE TO BE PROTECTED (TYP)

AREA OF MANUAL TREE REMOVAL A=0.066 AC

EXIST. TOWER TO BE REMOVED

SECTION OF EXISTING WALL TO BE REMOVED FOR CONSTRUCTION ACCESS AND MAINTENACE

OPENING IN EXISTING STONE WALL 42' WIDTH=28'±

WETLANDS

UPLANDS

WETLAND LINE (TYP)

BLDG.

TOWER

OWENS ROAD

CHIECHUNK ROAD

HARTLEY ROAD

ARCH

ENGRG

REDUCTION RATIO

REV	REVISION	DWN	DES	CHKD	DATE

ORANGE AND ROCKLAND UTILITIES, INC.
PEARL RIVER NEW YORK

CMX
CMX ENGINEERING, DIVISION OF LANDER ASSOCIATES, PC OF NEW YORK
AN AFFILIATE OF CMX CORPORATION
STATE OF NEW YORK · W. CHARLES UTSCHIG, JR. · PROFESSIONAL ENGINEER · LIC. No. 62303

ENGINEERING REVIEW		
DEPT.	SIGNATURE	DATE
CIVIL/SURVEY	M. Hromosiuk	11/7/11
TELECOM/MET.		
TRANS & SUB.		11/8/11
RELAY		

DWN	DES	CHKD
JP	MF	WCU
DESIGN REVIEW		DATE 08/31/11

APPROVED: DATE
- ☐ INFORMATION
- ☐ COMMENTS
- ☐ BID
- ☐ CONSTRUCTION
- ☒ PERMIT

HARTLEY ROAD SUBSTATION

EXISTING CONDITIONS AND DEMOLITION PLAN

SCALE	FILE NO.	DRAWING NUMBER			SHEET	REV.
1"=40'		K	F	6427	2 OF 12	A

ORFRMF.DWG
DATE: 00 TIME: 000

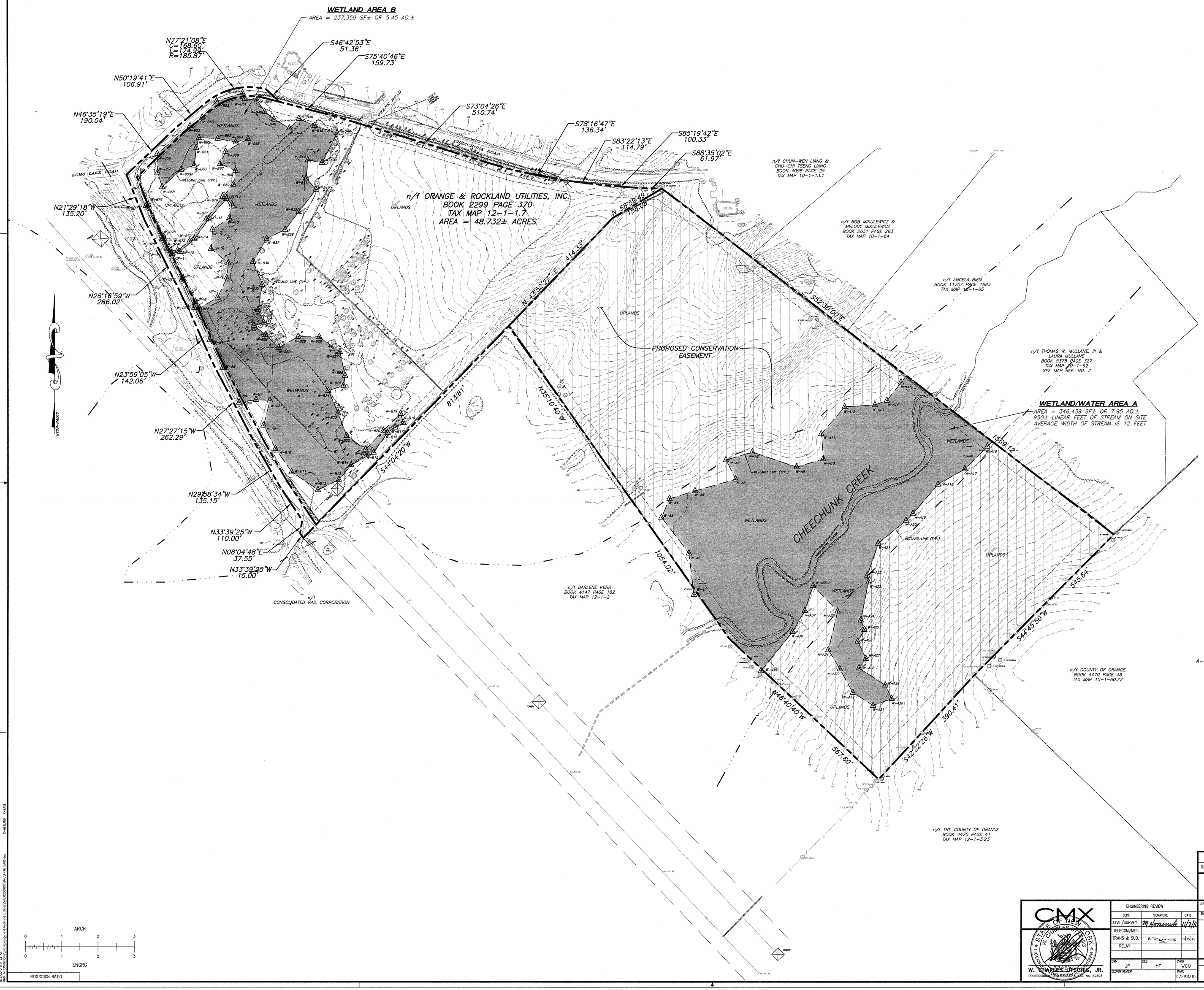

LEGEND

CIRS	CAPPED IRON ROD SET
IRF	IRON ROD FOUND
IPF	IRON PIPE FOUND
	STONE WALL
	WIRE FENCE
OHW	OVERHEAD UTILITIES
A-1 A-2	WETLANDS BOUNDARY AS DELINEATED BY CMX
	WETLANDS/WATERS

GENERAL NOTES

1. WETLANDS FLAGGED & FIELD LOCATED BY CMX NOVEMBER 24, 2009 AND DECEMBER 2, 2009.
2. BOUNDARY & TOPOGRAPHIC INFORMATION SHOWN HEREON TAKEN FROM A PLAN ENTITLED "BOUNDARY AND TOPOGRAPHIC SURVEY, PROPERTY OF AL TURI LANDFILL, INC., PREPARED FOR ORANGE AND ROCKLAND UTILITIES, INC., TOWN OF GOSHEN, ORANGE COUNTY, NEW JERSEY" PREPARED BY C.T. MALE ASSOCIATES, LATHAM, NY, DATED APRIL 4, 2006.

REV	REVISION	DWN	DES	CHKD	DATE

ORANGE AND ROCKLAND UTILITIES, INC.
PEARL RIVER NEW YORK

CMX
W. CHARLES UTSCHIG, JR.
PROFESSIONAL ENGINEER
STATE OF NEW YORK
W. CHARLES UTSCHIG, JR.
LICENSED PROFESSIONAL ENGINEER
No. 62303

ENGINEERING REVIEW		
DEPT.	SIGNATURE	DATE
CIVIL/SURVEY	M Hornunde	11/7/11
TELECOM/MET.		
TRANS & SUB.	A. Thomas	11/8/11
RELAY		

DWN	DES	CHKD
JP	MF	WCU
DESIGN REVIEW		DATE 07/23/10

APPROVED: [signature]
DATE: 11/8/11
☐ PERMIT
☐ BID
☐ CONSTRUCTION
☐ RECORD
☒ PERMIT

HARTLEY ROAD SUBSTATION

WETLAND DELINEATION PLAN

SCALE	FILE NO.	DRAWING NUMBER			SHEET	REV.
1" = 100'		K	F	6427	3 OF 12	A

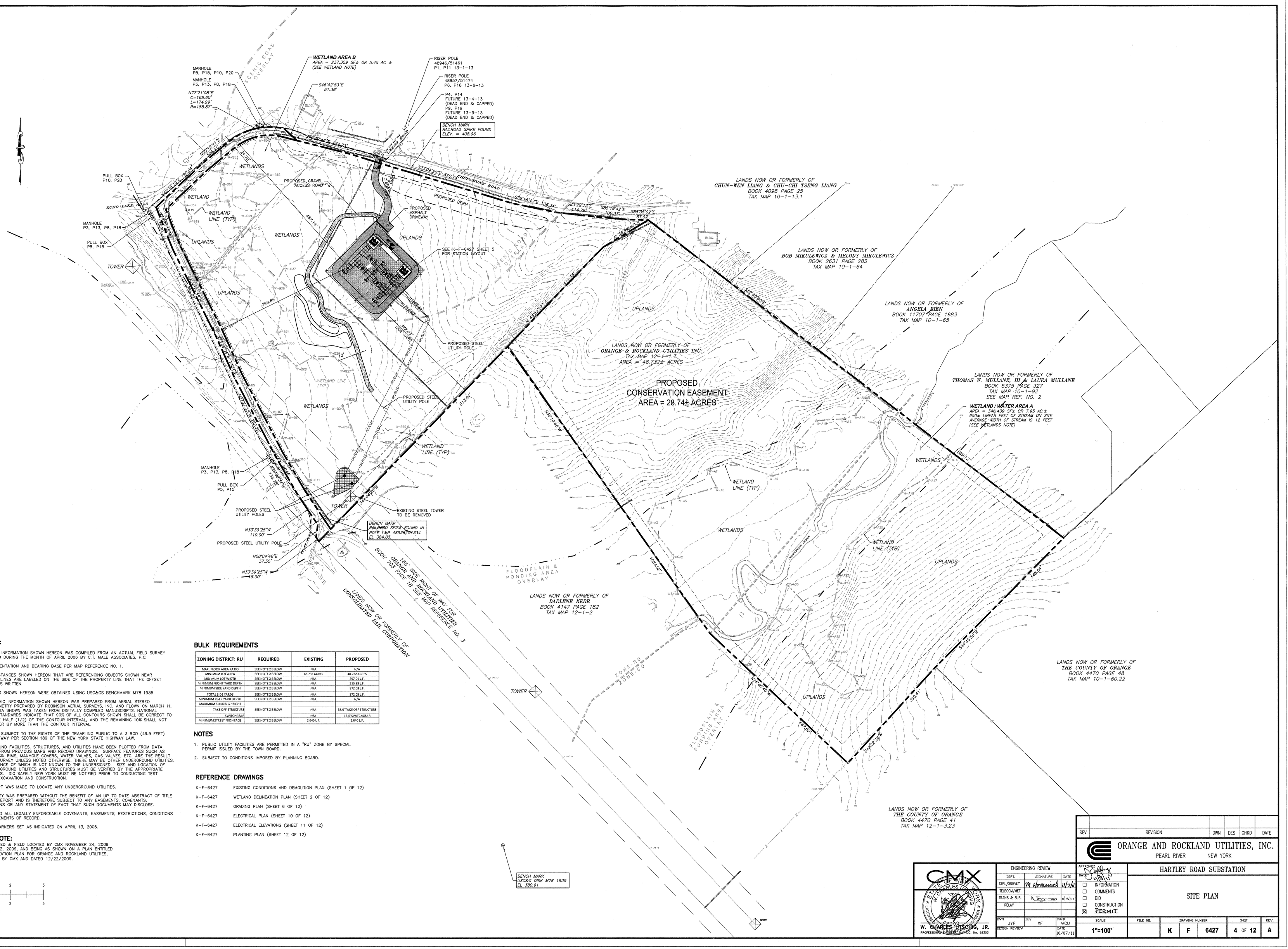

MAP NOTES:

1. BOUNDARY INFORMATION SHOWN HEREON WAS COMPILED FROM AN ACTUAL FIELD SURVEY CONDUCTED DURING THE MONTH OF APRIL 2006 BY C.T. MALE ASSOCIATES, P.C.
2. NORTH ORIENTATION AND BEARING BASE PER MAP REFERENCE NO. 1.
3. OFFSET DISTANCES SHOWN HEREON THAT ARE REFERENCING OBJECTS SHOWN NEAR PROPERTY LINES ARE LABELED ON THE SIDE OF THE PROPERTY LINE THAT THE OFFSET DISTANCE IS WRITTEN.
4. ELEVATIONS SHOWN HEREON WERE OBTAINED USING USC&GS BENCHMARK M78 1935.
5. TOPOGRAPHIC INFORMATION SHOWN HEREON WAS PREPARED FROM AERIAL STEREO PHOTOGRAMETRY PREPARED BY ROBINSON AERIAL SURVEYS, INC. AND FLOWN ON MARCH 11, 2006. DATA SHOWN WAS TAKEN FROM DIGITALLY COMPILED MANUSCRIPTS. NATIONAL MAPPING STANDARDS INDICATE THAT 90% OF ALL CONTOURS SHOWN SHALL BE CORRECT TO WITHIN ONE HALF (1/2) OF THE CONTOUR INTERVAL, AND THE REMAINING 10% SHALL NOT BE IN ERROR BY MORE THAN THE CONTOUR INTERVAL.
6. PARCEL IS SUBJECT TO THE RIGHTS OF THE TRAVELING PUBLIC TO A 3 ROD (49.5 FEET) RIGHT-OF-WAY PER SECTION 189 OF THE NEW YORK STATE HIGHWAY LAW.
7. UNDERGROUND FACILITIES, STRUCTURES, AND UTILITIES HAVE BEEN PLOTTED FROM DATA OBTAINED FROM PREVIOUS MAPS AND RECORD DRAWINGS. SURFACE FEATURES SUCH AS CATCH BASIN RIMS, MANHOLE COVERS, WATER VALVES, GAS VALVES, ETC. ARE THE RESULT OF FIELD SURVEY UNLESS NOTED OTHERWISE. THERE MAY BE OTHER UNDERGROUND UTILITIES, THE EXISTENCE OF WHICH IS NOT KNOWN TO THE UNDERSIGNED. SIZE AND LOCATION OF ALL UNDERGROUND UTILITIES AND STRUCTURES MUST BE VERIFIED BY THE APPROPRIATE AUTHORITIES. DIG SAFELY NEW YORK MUST BE NOTIFIED PRIOR TO CONDUCTING TEST BORINGS, EXCAVATION AND CONSTRUCTION.
8. NO ATTEMPT WAS MADE TO LOCATE ANY UNDERGROUND UTILITIES.
9. THIS SURVEY WAS PREPARED WITHOUT THE BENEFIT OF AN UP TO DATE ABSTRACT OF TITLE OR TITLE REPORT AND IS THEREFORE SUBJECT TO ANY EASEMENTS, COVENANTS, RESTRICTIONS OR ANY STATEMENT OF FACT THAT SUCH DOCUMENTS MAY DISCLOSE.
10. SUBJECT TO ALL LEGALLY ENFORCEABLE COVENANTS, EASEMENTS, RESTRICTIONS, CONDITIONS AND AGREEMENTS OF RECORD.
11. CORNER MARKERS SET AS INDICATED ON APRIL 13, 2006.

WETLAND NOTE:

WETLANDS FLAGGED & FIELD LOCATED BY CMX NOVEMBER 24, 2009 AND DECEMBER 2, 2009, AND BEING AS SHOWN ON A PLAN ENTITLED "WETLAND DELINEATION PLAN FOR ORANGE AND ROCKLAND UTILITIES, INC.", PREPARED BY CMX AND DATED 12/22/2009.

BULK REQUIREMENTS

ZONING DISTRICT: RU	REQUIRED	EXISTING	PROPOSED
MAX. FLOOR AREA RATIO	SEE NOTE 2 BELOW	N/A	N/A
MINIMUM LOT AREA	SEE NOTE 2 BELOW	48.732 ACRES	48.732 ACRES
MINIMUM LOT WIDTH	SEE NOTE 2 BELOW	N/A	597.03 L.F.
MINIMUM FRONT YARD DEPTH	SEE NOTE 2 BELOW	N/A	215.83 L.F.
MINIMUM SIDE YARD DEPTH	SEE NOTE 2 BELOW	N/A	372.08 L.F.
TOTAL SIDE YARDS	SEE NOTE 2 BELOW	N/A	372.08 L.F.
MINIMUM REAR YARD DEPTH	SEE NOTE 2 BELOW	N/A	N/A
MAXIMUM BUILDING HEIGHT			
TAKE OFF STRUCTURE	SEE NOTE 2 BELOW	N/A	68.0' TAKE OFF STRUCTURE
SWITCHGEAR		N/A	15.5' SWITCHGEAR
MINIMUM STREET FRONTAGE	SEE NOTE 2 BELOW	2,640 L.F.	2,640 L.F.

NOTES

1. PUBLIC UTILITY FACILITIES ARE PERMITTED IN A "RU" ZONE BY SPECIAL PERMIT ISSUED BY THE TOWN BOARD.
2. SUBJECT TO CONDITIONS IMPOSED BY PLANNING BOARD.

REFERENCE DRAWINGS

K-F-6427	EXISTING CONDITIONS AND DEMOLITION PLAN (SHEET 1 OF 12)
K-F-6427	WETLAND DELINEATION PLAN (SHEET 2 OF 12)
K-F-6427	GRADING PLAN (SHEET 6 OF 12)
K-F-6427	ELECTRICAL PLAN (SHEET 10 OF 12)
K-F-6427	ELECTRICAL ELEVATIONS (SHEET 11 OF 12)
K-F-6427	PLANTING PLAN (SHEET 12 OF 12)

ARCH
0 1 2 3
0 1 2 3
ENGRG

REDUCTION RATIO

CMX
W. CHARLES UTSCHIG, JR.
PROFESSIONAL ENGINEER

ENGINEERING REVIEW		
DEPT.	SIGNATURE	DATE
CIVIL/SURVEY	M. Hornunch	11/7/11
TELECOM/MET.		
TRANS & SUB.		
RELAY		
DWN JYP	DES MF	CHKD WCU
DESIGN REVIEW		DATE 10/07/11

REV	REVISION	DWN	DES	CHKD	DATE

ORANGE AND ROCKLAND UTILITIES, INC.
PEARL RIVER NEW YORK

APPROVED
DATE
☐ INFORMATION
☐ COMMENTS
☐ BID
☐ CONSTRUCTION
☒ PERMIT

HARTLEY ROAD SUBSTATION

SITE PLAN

SCALE	FILE NO.	DRAWING NUMBER	SHEET	REV.
1"=100'		K F 6427	4 OF 12	A

ORFRMF.DWG
DATE: 00 TIME: 000

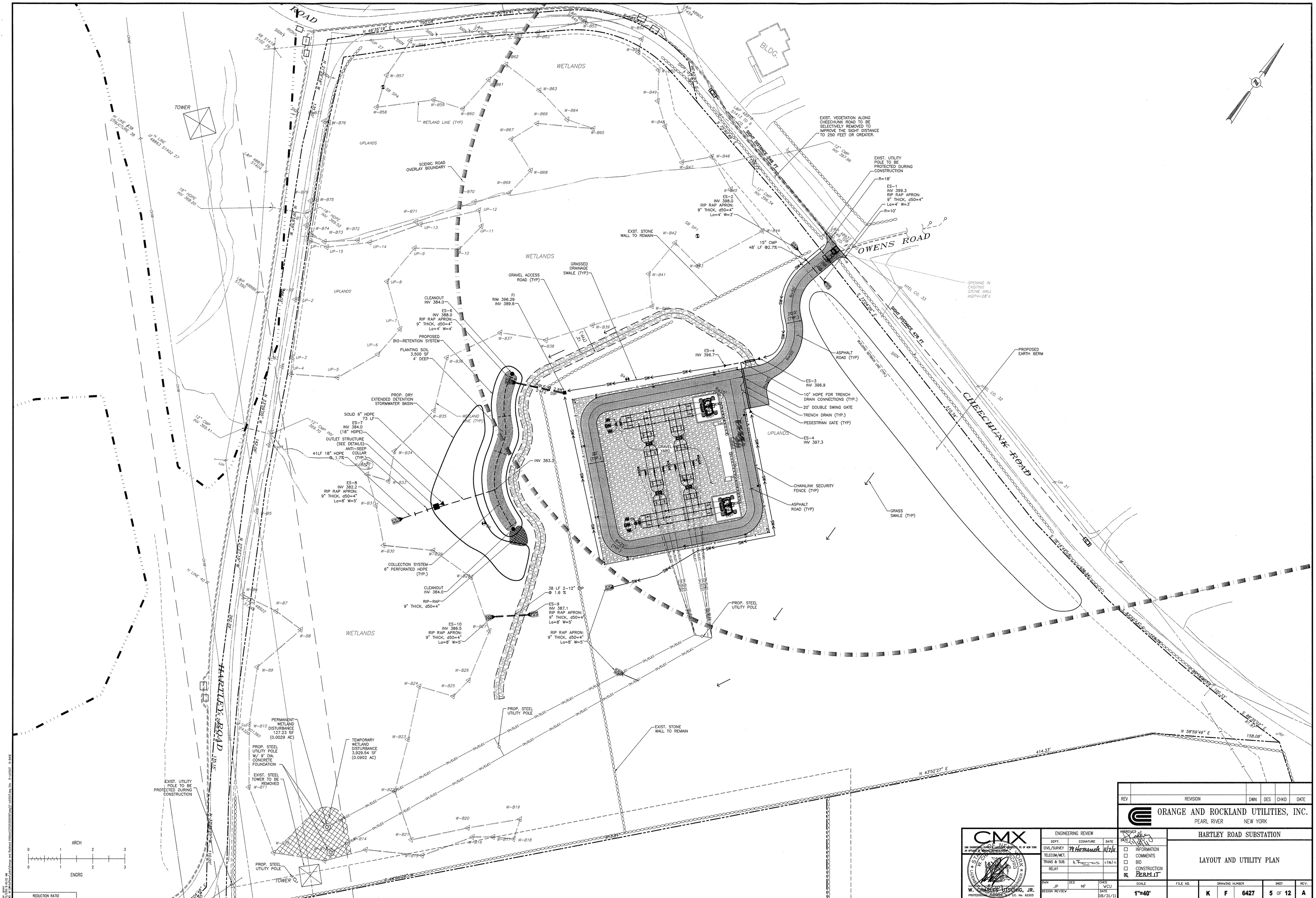

REV	REVISION	DWN	DES	CHKD	DATE

ORANGE AND ROCKLAND UTILITIES, INC.
PEARL RIVER NEW YORK

CMX
ONE CHURCHILL PLACE, PEARL RIVER, STATE OF NEW YORK
AN AFFILIATE OF ORANGE AND ROCKLAND UTILITIES, INC.
W. CHARLES HITSCHIG, JR.
PROFESSIONAL ENGINEER
CMX Engineering and Consulting, LLC. No. 62303

ENGINEERING REVIEW		
DEPT.	SIGNATURE	DATE
CIVIL/SURVEY	N Hormanek	11/7/11
TELECOM/MET.		
TRANS & SUB.	A. Tsoumas	11/8/11
RELAY		

DWN	DES	CHKD
JP	MF	WCU
DESIGN REVIEW		DATE 08/31/11

APPROVED
DATE 11/8/11
☐ INFORMATION
☐ COMMENTS
☐ BID
☐ CONSTRUCTION
☒ PERMIT

HARTLEY ROAD SUBSTATION

LAYOUT AND UTILITY PLAN

SCALE	FILE NO.	DRAWING NUMBER			SHEET	REV.
1"=40'		K	F	6427	5 OF 12	A

DWG. NAME
USER: MFOSTER, ALICE
DGN: W:\Projects\Arch\Orange and Rockland Utilities\CM\0200009.dgn/F-LAYOUT Lay Sds B-LAYOUT B-BASE
ORFRMF.DWG
DATE: 00 TIME: 000

ORANGE AND ROCKLAND UTILITIES, INC.
PEARL RIVER NEW YORK
HARTLEY ROAD SUBSTATION
GRADING PLAN
1"=40'
K F 6427 6 OF 12 A
CMX
W. CHARLES LITSCHIG, JR.
ENGINEERING REVIEW
CHEECHUNK ROAD
OWENS ROAD
HARTLEY ROAD
ECHO LAKE ROAD
WETLANDS
TOWER
MATCH LINE
INSERT
SCALE: 1"=40'

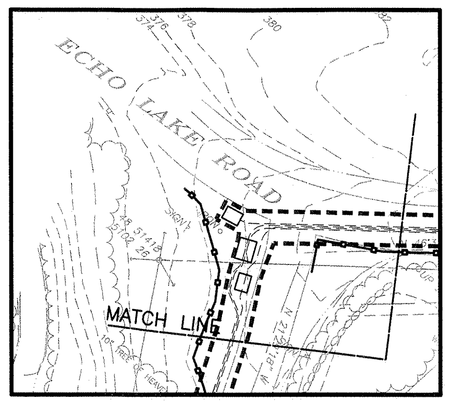

INSERT
SCALE: 1"=40'

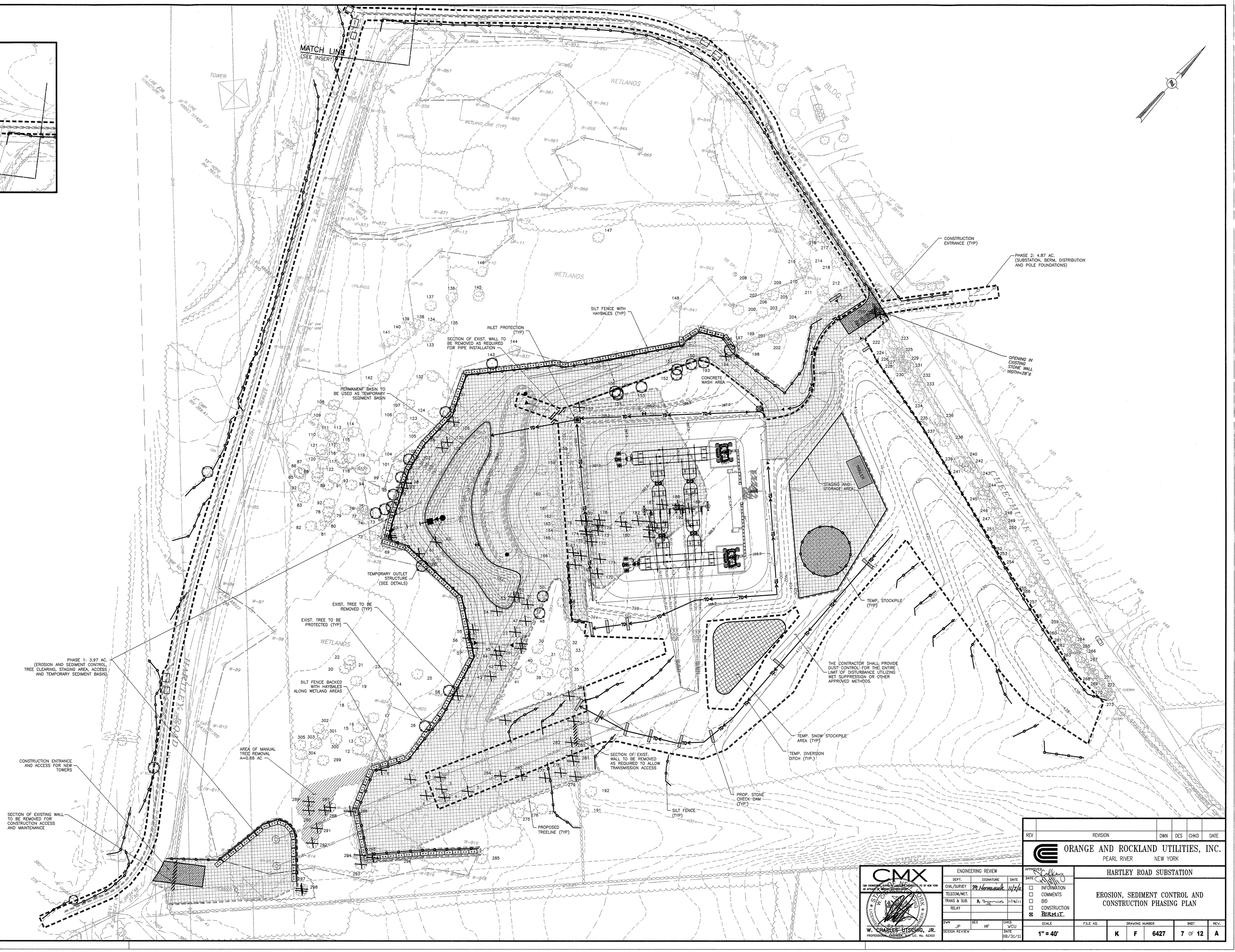

REV	REVISION	DWN	DES	CHKD	DATE

ORANGE AND ROCKLAND UTILITIES, INC.
PEARL RIVER NEW YORK

CMX
CIVIL ENGINEERING, SURVEYING, LANDSCAPE ARCHITECTURE, PC OF NEW YORK
AN AFFILIATE OF MICHAEL SCHIMMEL

W. CHARLES UTSCHIG, JR.
PROFESSIONAL ENGINEER, LIC. No. 62303

ENGINEERING REVIEW		
DEPT.	SIGNATURE	DATE
CIVIL/SURVEY	M Hommeuh	11/7/11
TELECOM/MET.		
TRANS & SUB.	A. Thomas	11/8/11
RELAY		

DWN	DES	CHKD
JP	MF	WCU
DESIGN REVIEW		DATE 08/31/11

APPROVED: [signature]
DATE: [signature]

- ☐ INFORMATION
- ☐ COMMENTS
- ☐ BID
- ☐ CONSTRUCTION
- ☒ PERMIT

HARTLEY ROAD SUBSTATION

EROSION, SEDIMENT CONTROL AND CONSTRUCTION PHASING PLAN

SCALE	FILE NO.	DRAWING NUMBER			SHEET	REV.
1" = 40'		K	F	6427	7 OF 12	A

DATE: 00 TIME: 000

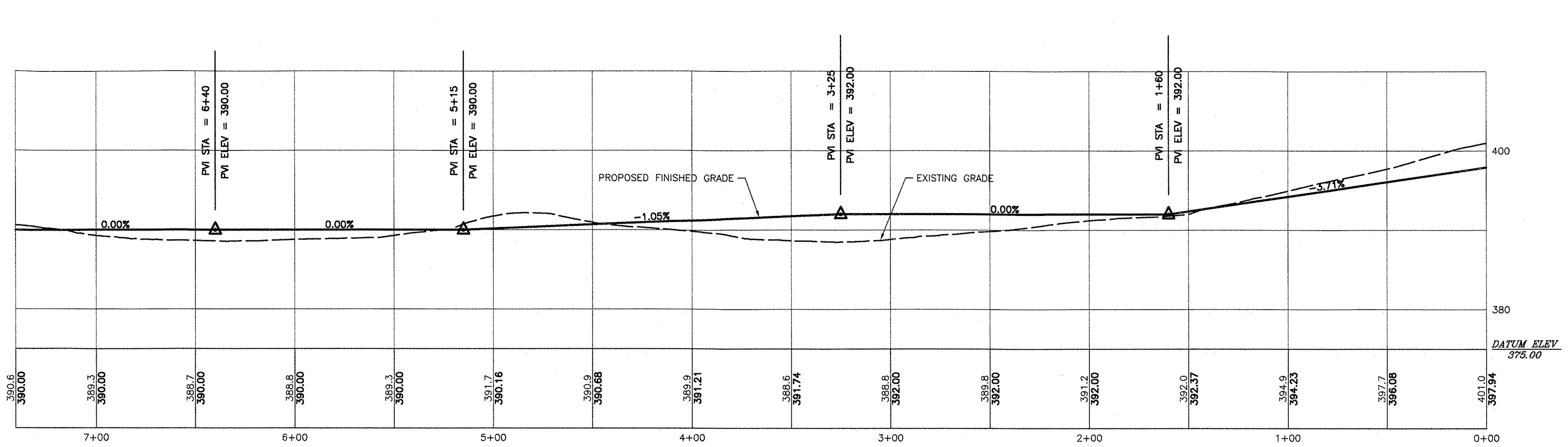

PROFILE - GRAVEL ACCESS ROAD

SCALE HORIZ: 1"=40'
VERT: 1"=10'

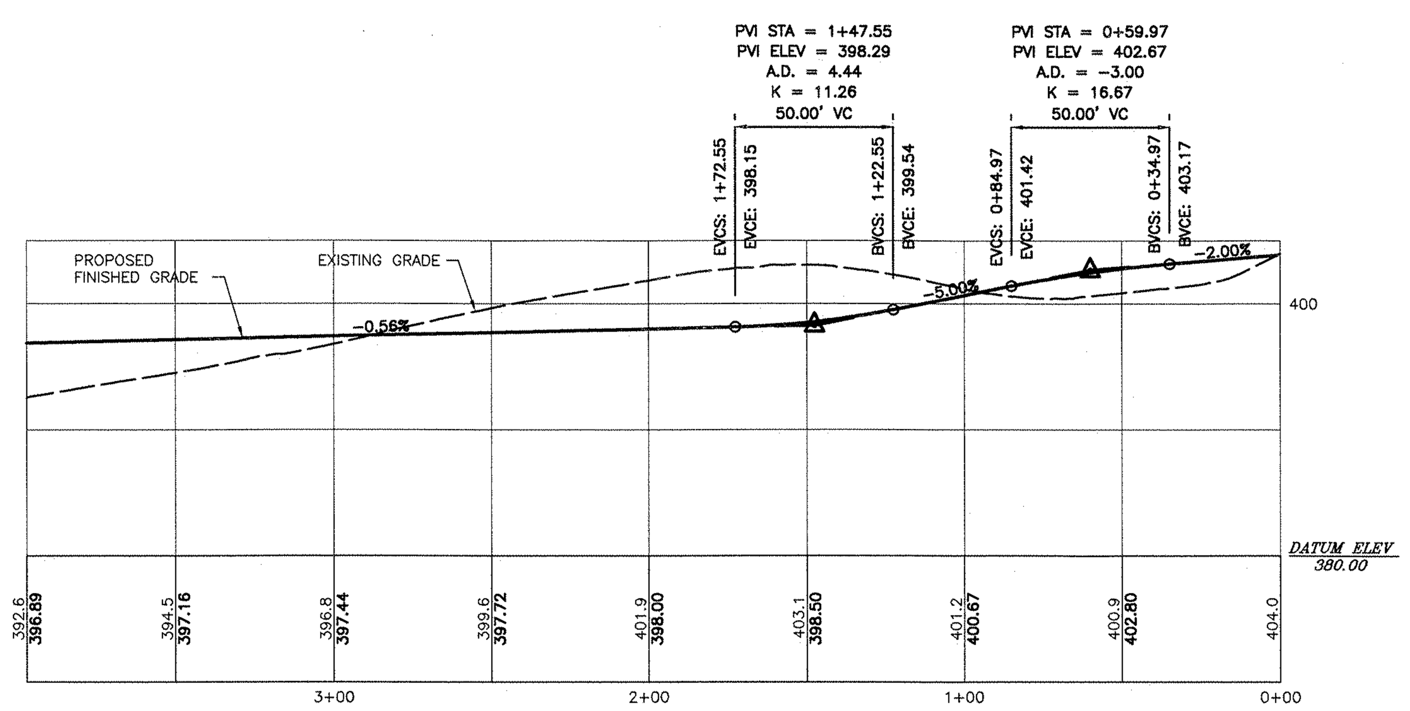

PROFILE - ASPHALT ENTRY ROAD

SCALE HORIZ: 1"=40'
VERT: 1"=10'

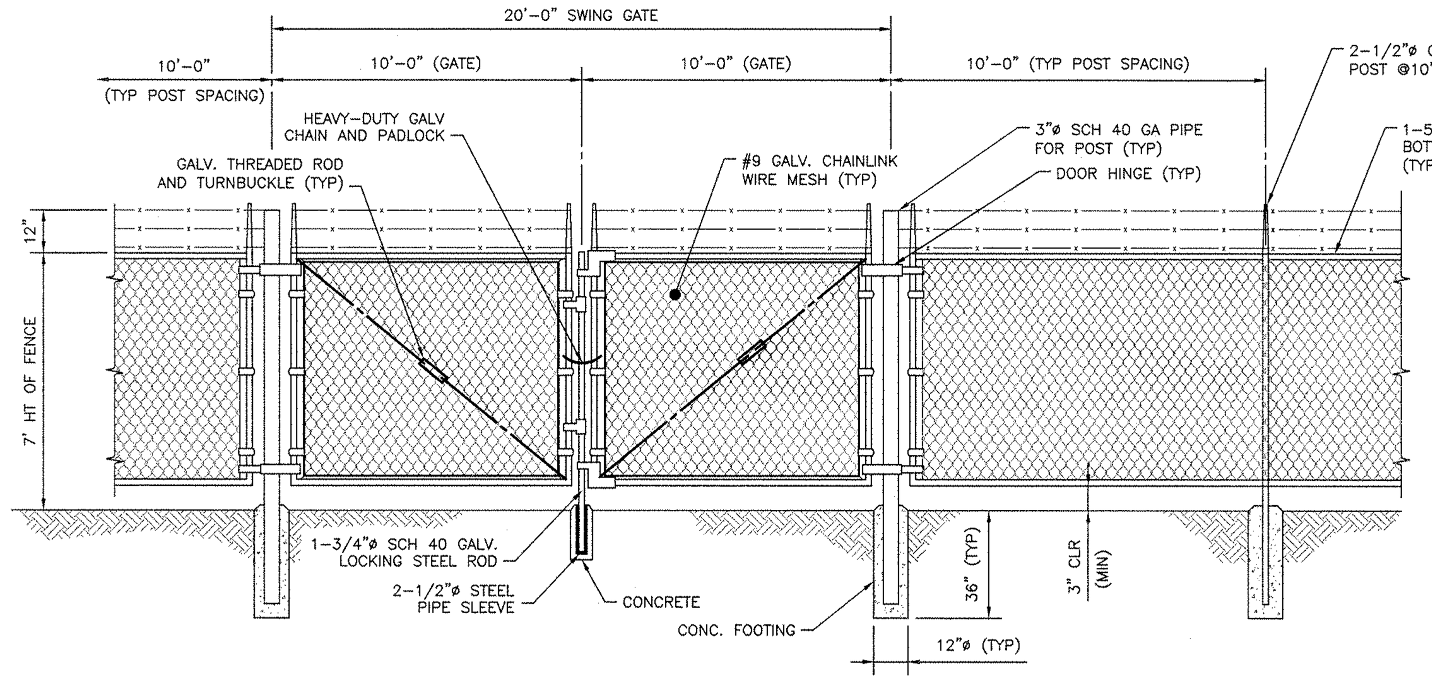

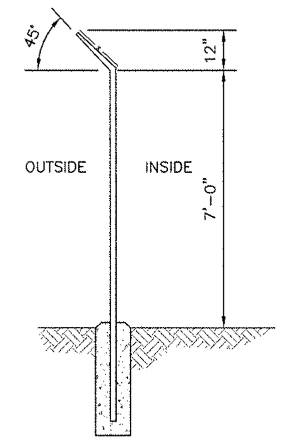

SIDE VIEW

CHAINLINK FENCE AND GATE

NTS

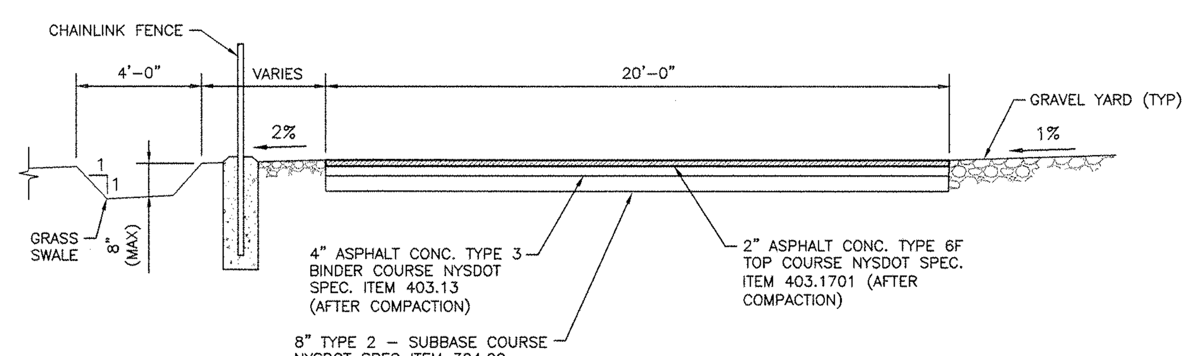

TYPICAL ROAD SECTION

NTS

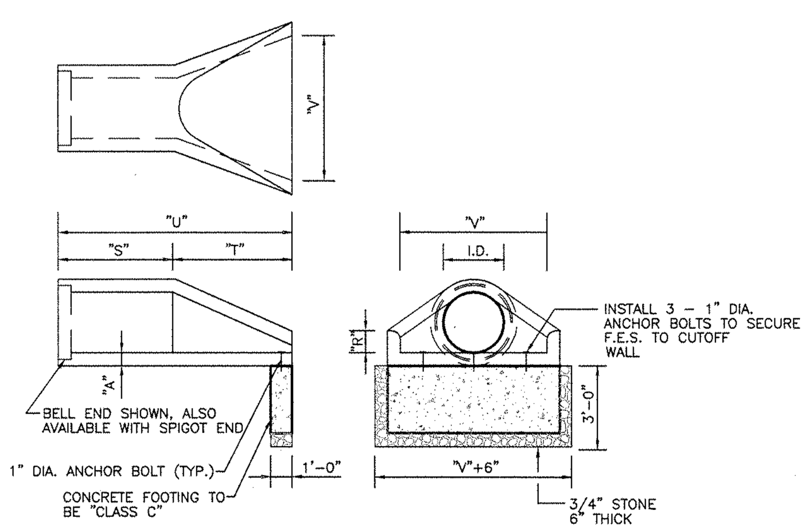

PIPE SIZE												
I.D.	12"	15"	18"	21"	24"	27"	30"	36"	42"	48"	54"	60"
"A"	2"	2.25"	2.5"	2.75"	3"	3.25"	3.5"	4"	4.5"	5"	5.5"	6"
"R"	5"	7.5"	9"		10"		14"		21"	24"	27"	31"
"S"	24"						26"		36"	36"	36"	
"T"	24"						30"	36"	60"	60"	60"	
"U"	4'-0"						4'-8"	5"-2"	8'-0"			
"V"	24"	28"	34"	40"	48"	54"	60"	72"	78"	84"	90"	96"
WT/FT	360	480	640	860	920	1200	1540	2100	5500	6500	8200	9300

CIRCULAR FLARED END SECTION

NTS

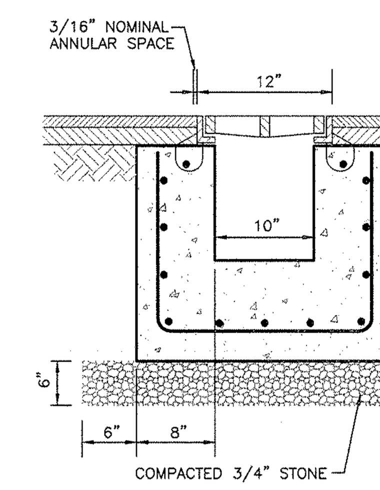

SECTION B-B

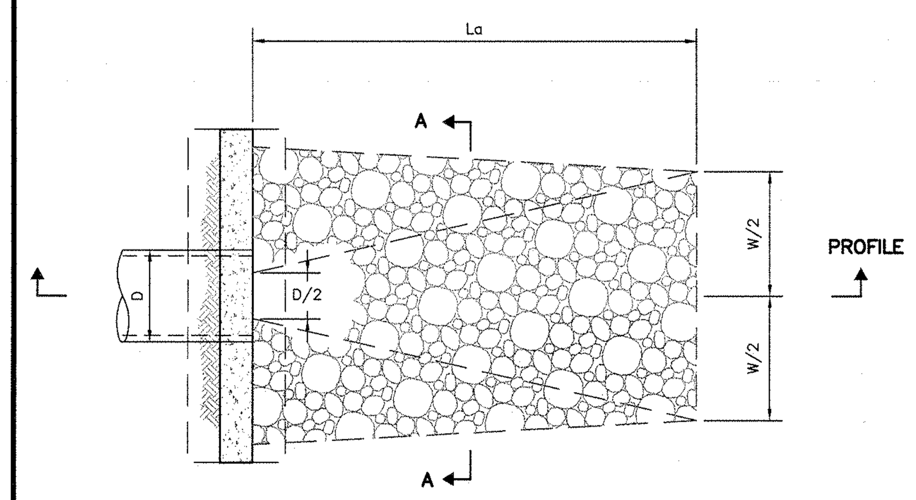

PLAIN VIEW

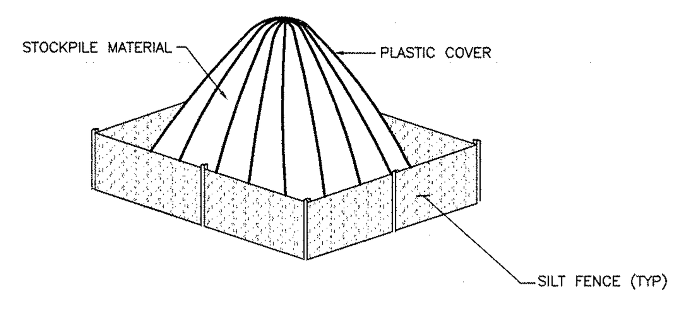

NOTE
STOCKPILE SHALL BE COVERED ENTIRELY BY AN ANCHORED PLASTIC COVER OR SEEDED

STOCKPILE CONTROL DETAIL

NTS

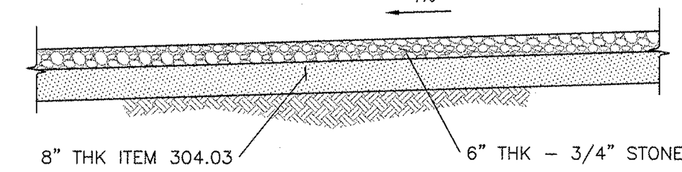

GRAVEL YARD

NTS

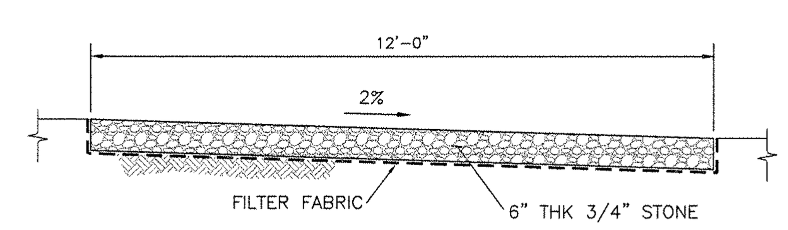

ACCESS DRIVE

NTS

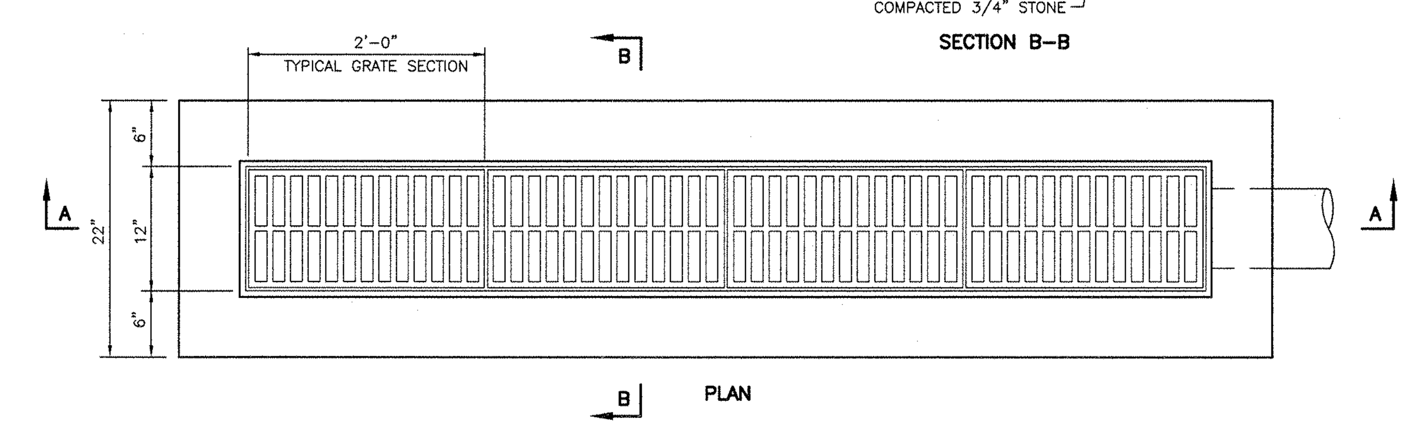

PLAN

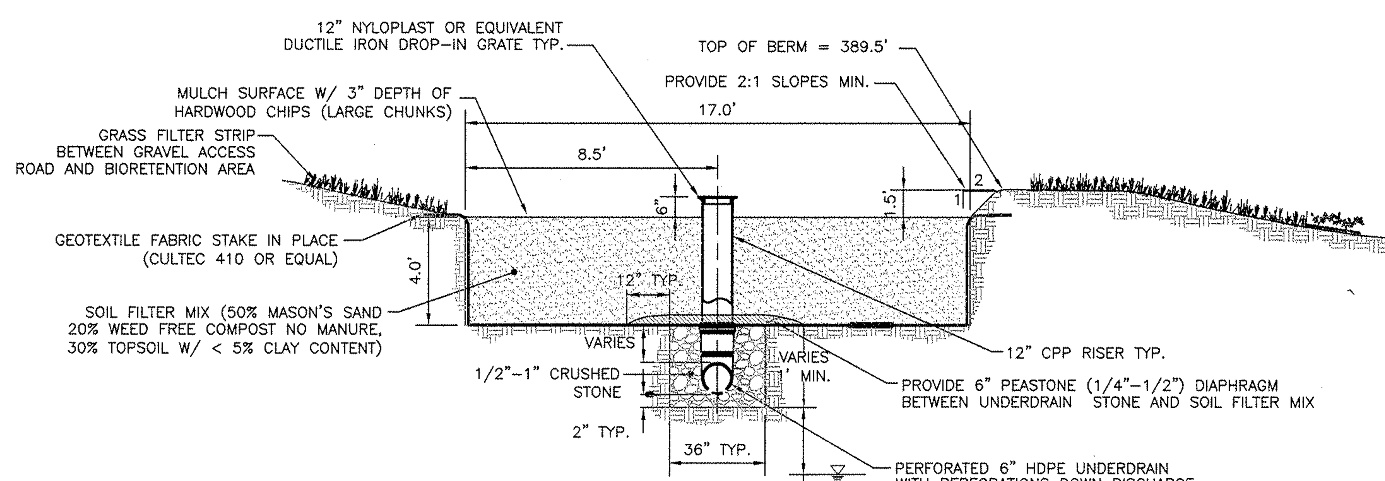

BIORETENTION SYSTEM

(NTS)

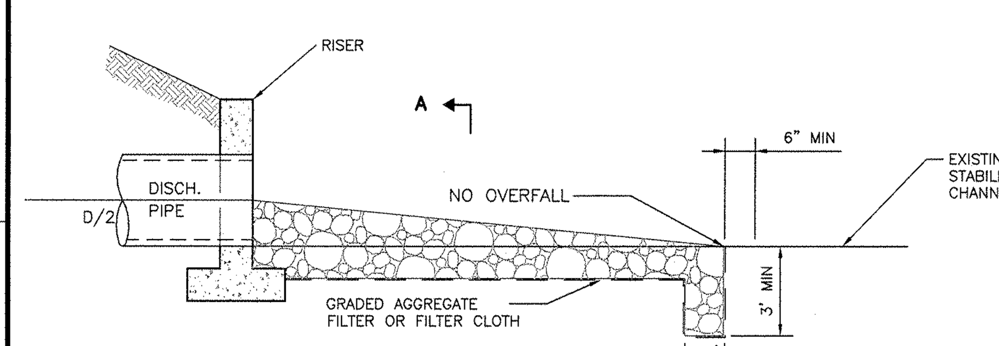

NOTE:
APRON @ ZERO GRADE SIDE SLOPE 2:1

PROFILE VIEW

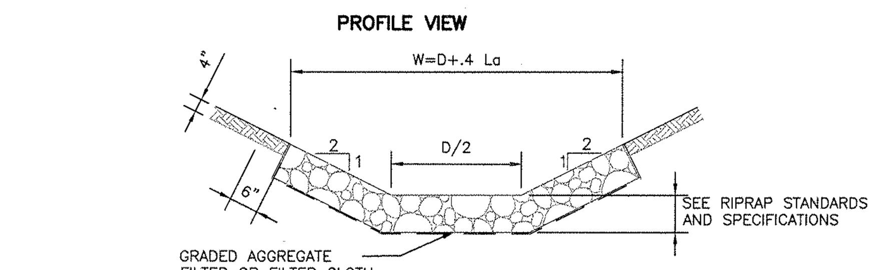

CROSS SECTION A-A

NOTE:
SEE RIPRAP STANDARDS AND SPECIFICATIONS MINIMUM TAILWATER CONDITIONS

RIPRAP OUTLET PROTECTION

NTS

ARCH 0 1 2 3
ENGRG 0 1 2 3

REDUCTION RATIO

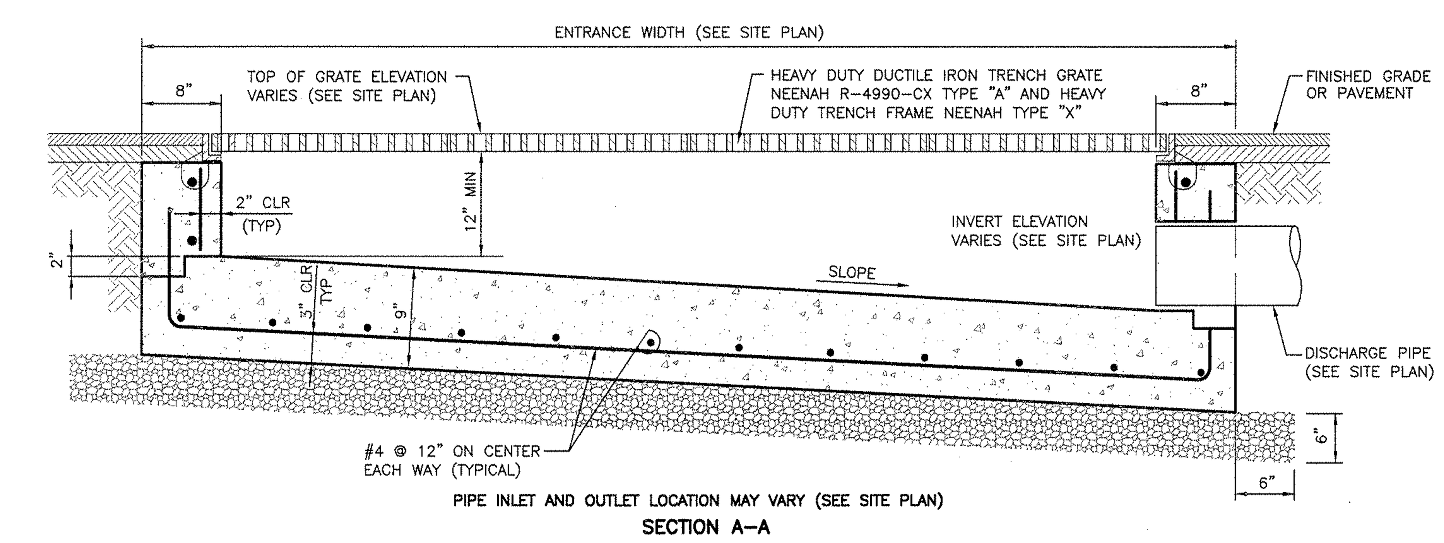

PIPE INLET AND OUTLET LOCATION MAY VARY (SEE SITE PLAN)

SECTION A-A

TRENCH DRAIN DETAIL

NTS

CONSTRUCTION SEQUENCE

1. STAKE THE LIMITS AND PROVIDE OFFSETS OF THE PROPOSED BIORETENTION AREA AND SET ACCESSIBLE REFERENCE ELEVATIONS, AS NEEDED.
2. INSTALL EROSION AND SEDIMENT CONTROL MEASURES CONSISTENT WITH OVERALL DEVELOPMENT E&S PLAN.
3. STABILIZE THE GRADING AROUND THE PROPOSED AREA AND DIVERT RUNOFF AWAY FROM THE PROPOSED EXCAVATIONS.
4. EXCAVATE THE BIORETENTION AREA TO THE PROPOSED LINES AND GRADES SHOWN ON THE SITE PLANS, AND SCARIFY THE EXISTING SOIL SURFACES, TAKING CARE NOT TO COMPACT THE IN-SITU SOILS.
5. INSTALL THE UNDERDRAIN SYSTEM AND OVERFLOW STRUCTURES. INSTALL THE FABRIC ON THE SIDEWALLS AND STAKE IN PLACE.
6. BACKFILL THE EXCAVATIONS WITH THE SOIL MIXTURE AS SHOWN ON THE PLANS AND SPECIFIED HEREIN.
7. FINISH GRADING THE SURFACE OF THE BIORETENTION AREA. LEAVE ROOM FOR THREE (3) INCHES OF WOOD CHIP MULCH.
8. PRESOAK THE PLANTING MIXTURE PRIOR TO PLACEMENT OF PLANTING STOCK. ALLOW THE SOIL MIXTURE TO SETTLE NATURALLY BEFORE PLACING THE PLANTS.
9. PLANT VEGETATION WITHIN THE BIORETENTION AREA AS SPECIFIED IN THE PLANTING NOTES AND LANDSCAPE PLANS (PROVIDED BY OTHERS).
10. MULCH THE SURFACE WITH NOT MORE THAN THREE (3) INCHES OF SINGLE PASS, HARDWOOD MULCH. REMOVE TEMPORARY SEDIMENT CONTROLS AND ANY ENTRANCE BLOCKS TO THE BIORETENTION AREA AFTER ACCEPTANCE BY THE DESIGN PROFESSIONAL AND THE LOCAL REGULATORY AUTHORITY.

BIORETENTION AREA

TREATMENT OF STORMWATER RUNOFF IS ACCOMPLISHED IN PROPOSED BIORETENTION AREA BY MEANS OF INFILTRATION USING PLANTING SOILS. PLANTINGS OF NATIVE VEGETATION WITHIN THE BIORETENTION AREA MAINTAIN THE INFILTRATIVE CAPACITY OF THE SYSTEM, PROVIDE SOIL STABILIZATION, AND THE ATTENUATE NUTRIENTS AND OTHER CONTAMINANTS. MANAGEMENT ACTIONS INCLUDE THE FOLLOWING:

1. ANNUAL INSPECTION AND REPAIR OF OR REPLACEMENT OF TREATMENT COMPONENTS.
2. TWICE PER YEAR (SPRING AND FALL) INSPECT TREES AND SHRUBS TO EVALUATE HEALTH, REMOVE AND REPLACE DEAD OR DYING PLANTS, AND PRUNE DISEASED OR BROKEN PLANTS.
3. TREATMENT OF DISEASED VEGETATION WITH APPROPRIATE LOW-TOXICITY CHEMICALS (HERBICIDES, PESTICIDES).
4. WEED ANNUALLY AND PRUNE SHRUB VEGETATION UNTIL VEGETATION IS ESTABLISHED TO IMPROVE APPEARANCE.
5. REPLACE MULCH TO COVER EXPOSED SOIL AREA. REMOVE AND REPLACE MULCH EVERY TWO TO THREE YEARS. MULCH DEPTH NOT TO EXCEED THREE (3) INCHES.
6. SAMPLE SOIL FOR FERTILITY EVERY THREE YEARS. ADDITION OF LIMESTONE ONE OR TWO TIMES PER YEAR TO MAINTAIN PROPER PH IS RECOMMENDED. FIELD OR LABORATORY TESTING FOR PH IS ACCEPTABLE.
7. CHECK BASIN FOR SEDIMENT BUILD UP AND REMOVE SEDIMENT IF GREATER THAN ONE INCH.
8. CHECK BASIN AFTER STORM EVENT TO ENSURE THAT IT DEWATERS PROPERLY (DRAINS WITHIN 48HRS).
9. CHECK OUTLET OVERFLOW FOR EVIDENCE OF BLOCKAGE AND SOIL EROSION AT DISCHARGE POINTS. CLEAN BLOCKAGES AS REQUIRED AND STABILIZE EROSIVE AREAS AS NEEDED.

GENERAL CONSTRUCTION SPECIFICATIONS

1. SOILS

SOIL FILTER MIXTURE – A SOIL MIXTURE OF 50-60% MASONS SAND (ASTM C-33) WITH GRAIN SIZE OF 0.02 -0.04", 20-30% WEED FREE LEAF COMPOST WITHOUT MANURE, AND 20-30% WEED FREE TOPSOIL WITH LESS THAN 5% CLAY SHALL BE USED TO FILL THE BIORETENTION EXCAVATION. THE SOIL SHALL BE FREE OF STONES, STUMPS, ROOTS OR SIMILAR OBJECTS LARGER THAN 2". NO OTHER MATERIALS SHALL BE MIXED IN WITH THE SOIL THAT MAY BE HARMFUL TO PLANT GROWTH OR PROVE A HINDRANCE TO THE PLANTING OR MAINTENANCE OPERATIONS. SOIL MIXTURE DEPTH SHALL BE 24" DEEP.

PRIOR TO PLACEMENT OF THE SOIL MEDIUM A CERTIFICATE FROM AN ACCREDITED LABORATORY MUST BE SUBMITTED TO THE DESIGN PROFESSIONAL ATTESTING TO THE SOIL'S PHYSICAL PROPERTIES (SIEVE ANALYSIS), CHEMICAL NATURE (PH AND FERTILITY) AND WEED FREE NATURE (GROW-OUT TEST). WEED FREE MEANS THE SOIL MEDIUM DOES NOT CONTAIN PLANTS OR SEEDS OF BERMUDA GRASS, QUACKGRASS, JOHNSON GRASS, MUGWORT, NUTSEDGE, POISON IVY, CANADIAN THISTLE, TEARTHUMB, OR OTHER NOXIOUS OR INVASIVE WEEDS AS DEFINED BY THE MOST RECENT LISTING PUBLISHED BY THE STATE OF NEW YORK.

THE EXCAVATED SOIL SURFACE SHALL BE SCARIFIED AND THE SOIL MIXTURE SHALL BE PLACED IN 8-12" LIFTS TAKING CARE NOT TO COMPACT THE EXISTING SOIL OR THE SOIL MIXTURE. LIFTS MAY BE LIGHTLY WATERED TO ENCOURAGE NATURAL COMPACTION. ANTICIPATE 20% COMPACTION OF THE SOIL MIXTURE FOLLOWING NATURAL COMPACTION. DEPRESSIONS GREATER THAN 6" BELOW THE FINISHED SURFACE OF THE AREA CAN BE FILLED WITH ADDITIONAL SOIL MIXTURE AND COVERED WITH 3" (MAXIMUM) LAYER OF "SINGLE PASS" HARDWOOD CHIP MULCH.

SOIL PH: SOIL PH RANGE SHALL BE 6.5 – 6.9.

ORGANIC MATTER CONTENT: 1.5-3.0 % BY DRY WEIGHT.

2. UNDERDRAIN

PERFORATED HDPE PIPE SURROUNDED BY WASHED STONE SHALL BE PLACED BENEATH THE BIORETENTION AREA. ALL DRAINS SHALL CONNECT TO THE DRAINAGE SYSTEM AND SHALL DISCHARGE AS SHOWN ON SITE PLAN.

3. PEA GRAVEL DIAPHRAGM

A PEA GRAVEL DIAPHRAGM, SIX (6) INCHES (MINIMUM) IN DEPTH, SHALL BE PLACED OVER THE UNDERDRAIN AND EXTEND ONE (1) FOOT TO EITHER SIDE OF THE EDGE OF THE DRAIN. PEA GRAVEL SHALL BE 1/4-1/2" DIAMETER.

4. FILTER FABRIC

FILTER FABRIC SHALL BE A NON-WOVEN TYPE (ASTM D-4491) HAVING A MINIMUM FLOW RATE OF 125 GALS/MIN/FT2. MULLEN BURST STRENGTH OF 400 PSI (ASTM D-1117), TENSILE STRENGTH OF 300 LBS.(ASTM D-1682); 0.08" THICK, E.O.S. #80. THE FABRIC SHALL BE PRE-APPROVED BY THE DESIGN PROFESSIONAL PRIOR TO USE. FABRIC SHALL BE PLACED ON THE SIDEWALLS (FROM SUBGRADE LEVEL AND OVER THE STONE LAYER). FABRIC SHALL BE OVERLAPPED BY 1-FOOT (MINIMUM) AT THE ENDS AND STAKED IN PLACE DURING CONSTRUCTION AT THE TURNED UP SURFACES. EXCESS FABRIC MAY BE REMOVED BY CUTTING ALONG THE DESIRED ELEVATIONS.

5. MULCH

ONLY FRESH, SINGLE PASS, SHREDDED HARDWOOD MULCH SHALL BE USED TO MULCH THE SURFACE OF THE BIORETENTION AREA. MULCH SHALL BE PLACED TO A MAXIMUM HEIGHT OF 3" OVER THE ENTIRE SURFACE OF THE BIORETENTION AREA'S FINISHED SURFACE AFTER PLANTS ARE INSTALLED. MULCH SHALL BE FREE OF FOREIGN MATERIALS INCLUDING PLANT MATERIALS AND WELL AGED (STOCKPILED FOR GREATER THAN 12 MONTHS). PROTECT AND LIFT GROUND COVER PLANTS TO PLACE THE MULCH MATERIAL BENEATH AND IN BETWEEN THE PLANTINGS.

REV	REVISION	DWN	DES	CHKD	DATE

ORANGE AND ROCKLAND UTILITIES, INC.
PEARL RIVER NEW YORK

HARTLEY ROAD SUBSTATION

ROAD PROFILES AND CONSTRUCTION DETAILS

CMX
W. CHARLES UTSCHIG, JR.
PROFESSIONAL ENGINEER, N.Y. LIC. No. 62303

ENGINEERING REVIEW		
DEPT.	SIGNATURE	DATE
CIVIL/SURVEY	M. Hormuzdi	11/7/11
TELECOM/MET.		
TRANS & SUB.	A. Tomas	11/3/11
RELAY		

DWN JYP | DES FM | CHKD WCU | DESIGN REVIEW | DATE 08/31/11

APPROVED / DATE
☐ INFORMATION
☐ COMMENTS
☐ BID
☐ CONSTRUCTION
☒ PERMIT

SCALE	FILE NO.	DRAWING NUMBER			SHEET	REV.
AS SHOWN		K	F	6427	8 OF 12	A

ORFRMF.DWG
DATE: 00
TIME: 000

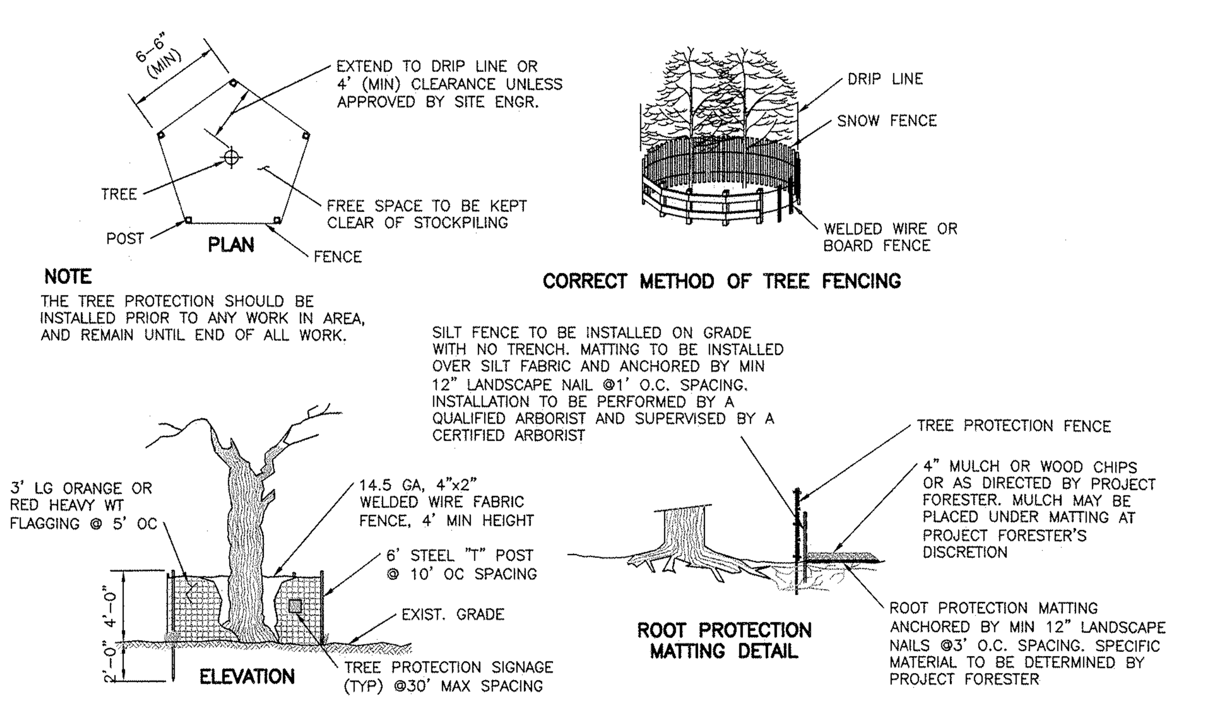

NOTE
THE TREE PROTECTION SHOULD BE INSTALLED PRIOR TO ANY WORK IN AREA, AND REMAIN UNTIL END OF ALL WORK.

SILT FENCE TO BE INSTALLED ON GRADE WITH NO TRENCH. MATTING TO BE INSTALLED OVER SILT FABRIC AND ANCHORED BY MIN 12" LANDSCAPE NAIL @1' O.C. SPACING. INSTALLATION TO BE PERFORMED BY A QUALIFIED ARBORIST AND SUPERVISED BY A CERTIFIED ARBORIST

CONSTRUCTION SPECIFICATIONS
1. TREE PROTECTION AREA WILL BE DETERMINED AS PART OF THE PLAN REVIEW PROCESS. EXACT LOCATION, DEPTH AND METHODS OF ROOT PRUNING TO BE DETERMINED IN FIELD BY PROJECT FORESTER.
2. EXACT LOCATION OF TREE PROTECTION AREAS SHALL BE STAKED OR FLAGGED PRIOR TO TRENCHING.
3. TRENCH SHOULD BE BACKFILED IMMEDIATELY OR INCORPORATED WITH SILT FENCE INSTALLATION.
4. ROOTS SHOULD BE SEVERED BY TRENCHER, VIBRATORY PLOW OR APPROVED EQUIVALENT. ROOTS OVER 1.5" DIAMETER SHOULD BE CLEANLY CUT BY HAND. ROOT PRUNING ADJACENT TO SPECIMEN TREES MAY REQUIRE SOIL REMOVAL BY SUPERSONIC AIR TOOL TO MINIMIZE TREE AND ROOT IMPACTS.

TREE/VEGETATION PROTECTION BARRIER
NTS

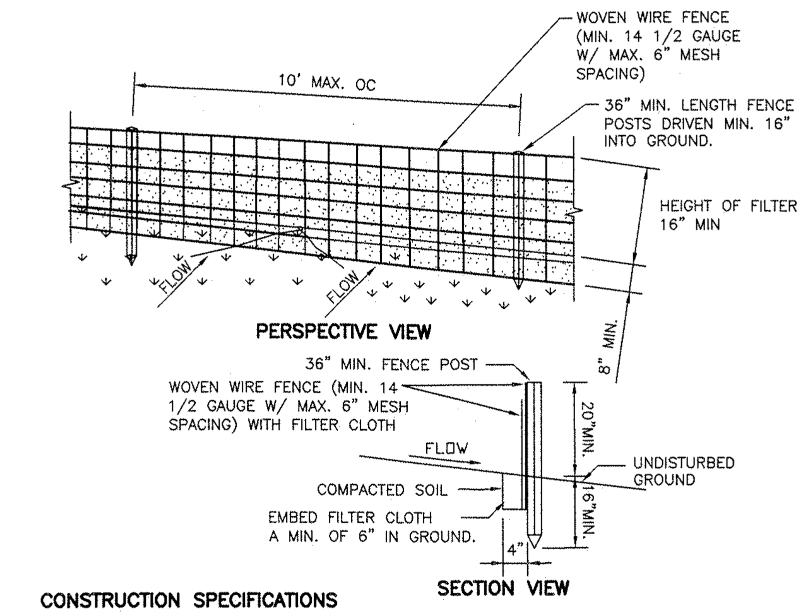

CONSTRUCTION SPECIFICATIONS
1. WOVEN WIRE FENCE TO BE FASTENED SECURELY TO FENCE POSTS WITH WIRE TIES OR STAPLES. POSTS SHALL BE STEEL EITHER "T" OR "U" TYPE OR HARDWOOD.
2. FILTER CLOTH TO BE TO BE FASTENED SECURELY TO WOVEN WIRE FENCE WITH TIES SPACED EVERY 24" AT TOP AND MID SECTION. FENCE SHALL BE WOVEN WIRE, 12 1/2 GAUGE, 6" MAXIMUM MESH OPENING.
3. WHEN TWO SECTIONS OF FILTER CLOTH ADJOIN EACH OTHER THEY SHALL BE OVER-LAPPED BY SIX INCHES AND FOLDED. FILTER CLOTH SHALL BE EITHER FILTER X, MIRAFI 100X, STABILINKA T140N, OR APPROVED EQUIVALENT.
4. PREFABRICATED UNITS SHALL BE GEOFAB, ENVIROFENCE, OR APPROVED EQUIVALENT.
5. MAINTENANCE SHALL BE PERFORMED AS NEEDED AND MATERIAL REMOVED WHEN "BULGES" DEVELOP IN THE SILT FENCE.

SILT FENCE INSTALLATION DETAIL
NTS

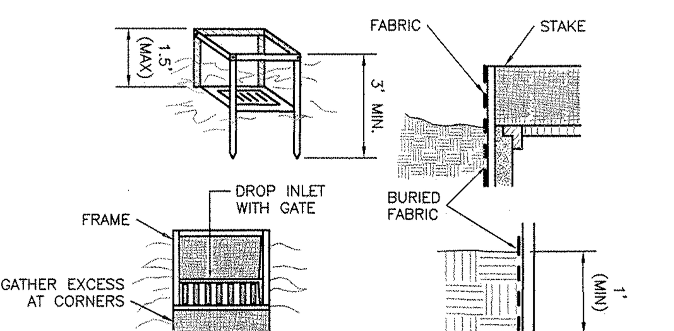

FIELD INLET CONSTRUCTION SPECIFICATIONS
1. FILTER FABRIC SHALL HAVE AN EOS OF 40-85. BURLAP MAY BE USED FOR SHORT TERM APPLICATIONS.
2. CUT FABRIC FROM A CONTINUOUS ROLL TO ELIMINATE JOINTS. IF JOINTS ARE NEEDED THEY WILL BE OVERLAPPED TO THE NEXT STAKE.
3. STAKE MATERIALS WILL BE STANDARD 2"x4" WOOD OR EQUIVALENT. METAL WITH A MINIMUM LENGTH OF 3 FEET.
4. SPACE STAKES EVENLY AROUND INLET 3 FEET APART AND DRIVE A MINIMUM 18 INCHES DEEP. SPANS GREATER THAN 3 FEET MAY BE BRIDGED WITH THE USE OF WIRE MESH BEHIND THE FILTER FABRIC FOR SUPPORT.
5. FABRIC SHALL BE EMBEDDED 1 FOOT MINIMUM BELOW GROUND AND BACKFILLED. IT SHALL BE SECURELY FASTENED TO THE STAKES AND FRAME.
6. A 2"x4" WOOD FRAME SHALL BE COMPLETED AROUND THE CREST OF THE FABRIC FOR OVER FLOW STABILITY. MAXIMUN DRAINAGE AREA 1 ACRE

INLET PROTECTION
NTS

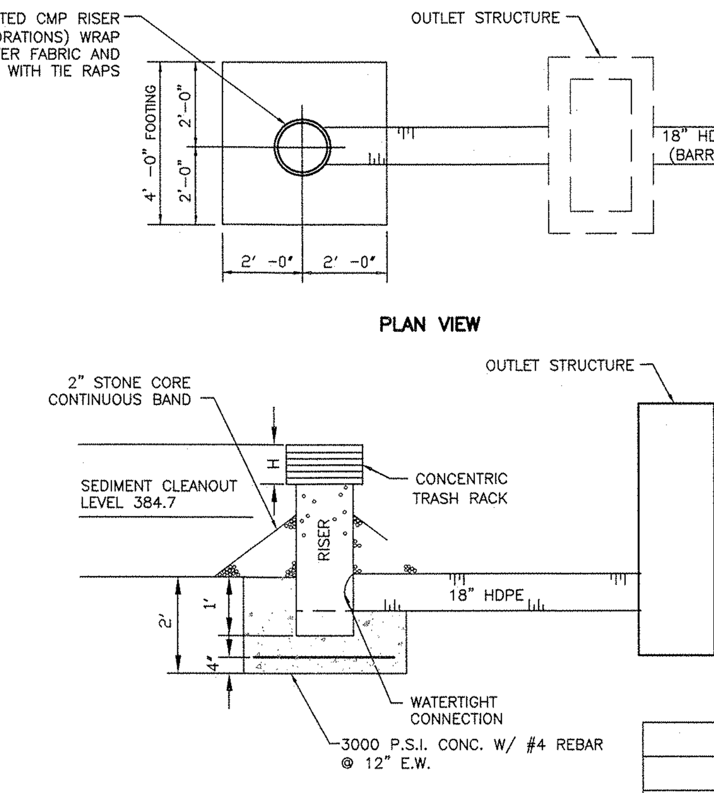

NOTES
TEMPORARY RISER WILL CONNECT TO BARREL AT SAME ELEVATION AS PROPOSED ON UTILITY PLAN FOR OUTLET STRUCTURE.

TEMPORARY OUTLET STRUCTURE
NTS

TEMPORARY OUTLET STRUCTURE

RISER (HDPE)		CREST ELEV.	TRASH RACK		SEDIMENT CLEANOUT
DIAM.	LENGTH		DIAM.	H	
24"	3.2'	387.2	36"	13"	384.7

NOTES
1. SEDIMENT BASIN TO BE CONSTRUCTED AS PERMANENT EXTENDED DETENTION BASIN WITH MODIFICATIONS.
   A. CONSTRUCT TEMPORARY PERFORATED RISER AS SHOWN.
   B. PROTECT RISER WITH TRASH RACK.
   C. PERFORATIONS MUST NOT BE MADE ANY LOWER THAN 6" ABOVE TOP OF THE HORIZONTAL OUTFALL BARREL.
2. PERIODIC MAINTENANCE OF REMOVING SEDIMENT FROM BASIN WILL BE ANNUAL, OR AS NECESSARY WHEN SEDIMENT REACHES CLEANOUT LEVEL INDICATED BELOW.
3. UPON COMPLETION OF SITE CONSTRUCTION AND STABILIZATION OF TOPSOIL, TEMPORARY SEDIMENT BASIN OUTLET CONTROL STRUCTURE IS TO BE REMOVED AND PERMANENT OUTLET STRUCTURE INSTALLED.
   A. REMOVE TEMPORARY RISER STRUCTURE.
   B. REMOVE SEDIMENT WHERE NEEDED, FINAL GRADE THE DETENTION BASIN AND STABILIZE.
   C. CUT BARREL TO FINAL LENGTH FOR PERMANENT OUTLET STRUCTURE (SEE UTILITY PLANS).
   D. INSTALL PERMANENT OUTLET STRUCTURE.

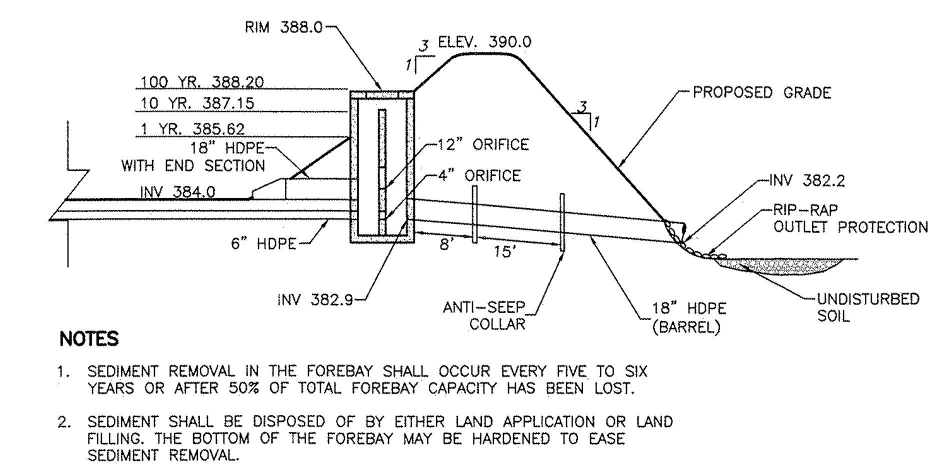

NOTES
1. SEDIMENT REMOVAL IN THE FOREBAY SHALL OCCUR EVERY FIVE TO SIX YEARS OR AFTER 50% OF TOTAL FOREBAY CAPACITY HAS BEEN LOST.
2. SEDIMENT SHALL BE DISPOSED OF BY EITHER LAND APPLICATION OR LAND FILLING. THE BOTTOM OF THE FOREBAY MAY BE HARDENED TO EASE SEDIMENT REMOVAL.

EXTENDED DETENTION BASIN
NTS

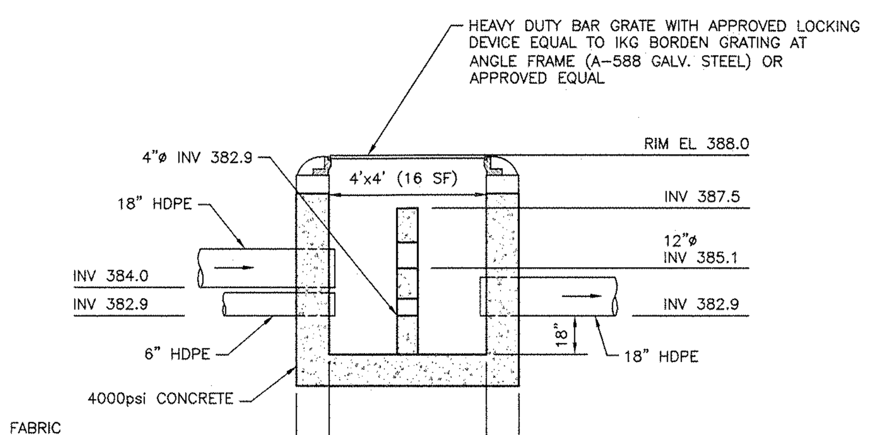

OUTLET STRUCTURE
NTS

NOTES
1. USE 3000 PSI CONCRETE.
2. MAINTAIN A MINIMUM 6" COVER OVER ANTI-SEEP COLLAR.
3. THE CONNECTION OF ANTI-SEEP COLLARS TO OUTLET PIPES SHALL BE WATERTIGHT.
4. O-RING GASKETS SHALL BE USED ON BASIN DISCHARGE PIPES THROUGH BERM AREAS.
5. MAXIMUM SPACING OF ANTI-SEEP COLLARS THROUGH BERM AREAS SHALL BE 40 FEET.

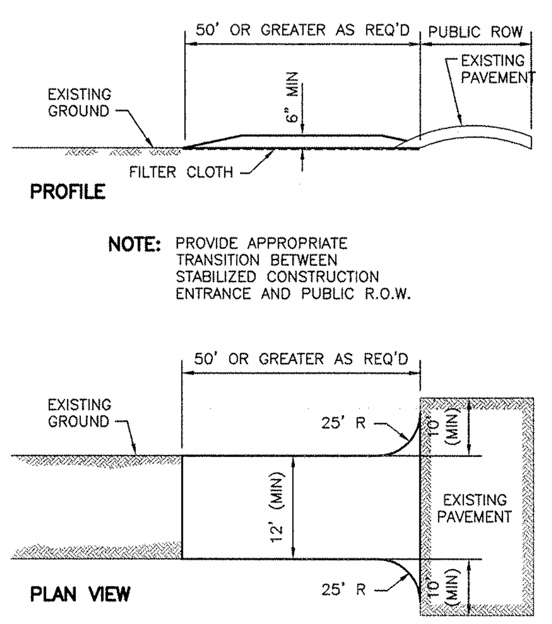

NOTE: PROVIDE APPROPRIATE TRANSITION BETWEEN STABILIZED CONSTRUCTION ENTRANCE AND PUBLIC R.O.W.

CONSTRUCTION SPECIFICATIONS
1. STONE SIZE – USE 2" STONE, OR RECLAIMED OR RECYCLED CONCRETE EQUIVALENT.
2. LENGTH – NOT LESS THAN 50 FEET (EXCEPT ON A SINGLE RESIDENCE LOT WHERE A 30 FOOT MINIMUM LENGTH WOULD APPLY).
3. THICKNESS – NOT LESS THAN SIX (6) INCHES.
4. WIDTH – TWELVE (12) FOOT MINIMUM, BUT NOT LESS THAN THE FULL WIDTH AT POINTS WHERE INGRESS OR EGRESS OCCURS. TWENTY-FOUR (24) FOOT IF SINGLE ENTRANCE TO SIGHT.
5. FILTER CLOTH – WILL BE PLACED OVER THE ENTIRE AREA PRIOR TO PLACING OF STONE.
6. SURFACE WATER – ALL SURFACE WATER FLOWING OR DIVERTED TOWARD CONSTRUCTION ENTRANCES SHALL BE PIPED ACROSS THE ENTRANCE. IF PIPING IS IMPRACTICAL, A MOUNTABLE BERM WITH 5:1 SLOPES WILL BE PERMITTED
7. MAINTENANCE – THE ENTRANCE SHALL BE MAINTAINED IN A CONDITION WHICH WILL PREVENT TRACKING OR FLOWING OF SEDIMENT ONTO PUBLIC RIGHTS-OF-WAY, ALL SEDIMENT SPILLED, DROPPED, WASHED OR TRACTED ONTO PUBLIC RIGHTS-OF-WAY MUST BE REMOVED IMMEDIATELY.
8. WHEN WASHING IS REQUITED, IT SHALL BE DONE ON A AREA STABILISED WITH STONE AND WHICH DRAINS INTO AN APPROVED SEDIMENT TRAPPING DEVICE.
9. PERIODIC INSPECTION AND NEEDED MAINTENANCE SHALL BE PROVIDED AFTER EACH RAIN.

STABILIZED CONSTRUCTION ENTRANCE
NTS

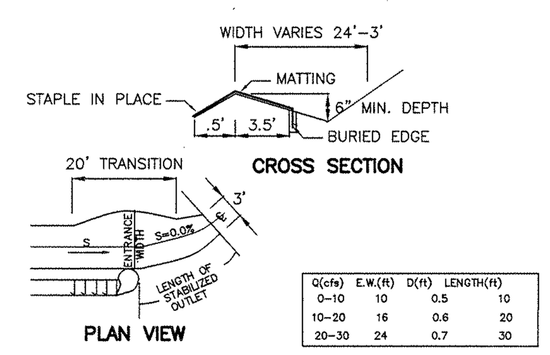

Q(cfs)	E.W.(ft)	D(ft)	LENGTH(ft)
0-10	10	0.5	10
10-20	16	0.6	20
20-30	24	0.7	30

CONSTRUCTION SPECIFICATIONS
1. THE MATTING SHOULD BE A MINIMUM OF 4FT. WIDE EXTENDING 6 INCHES OVER THE LIP AND BURIED 6 INCHES DEEP IN A VERTICAL TRENCH ON THE LOWER EDGE. THE UPPER EDGE SHOULD BUTT AGAINST SMOOTHLY CUT SOD AND BE SECURELY HELD IN PLACE WITH CLOSELY SPACED HEAVY DUTY WIRE STAPLES AT LEAST 12 INCHES IN LENGTH.
2. ENSURE THAT THE LIP IS LEVEL TO UNIFORMLY SPREAD DISCHARGE.
3. THE LIP SHALL BE CONSTRUCTED ON UNDISTURBED SOIL NOT FILL.
4. A 20 FOOT TRANSITION SECTION WILL BE CONSTRUCTED FROM THE DIVERSION CHANNEL TO THE SPREADER TO SMOOTHLY BLEND THE DIFFERENT DIMENSION AND GRADES.
5. THE RUNOFF DISCHARGE WILL BE OUTLETED ONTO A STABILIZED VEGETATED SLOPE NOT EXCEEDING 10%.
6. SEED AND MULCH THE DISTURBED AREA IMMEDIATELY AFTER CONSTRUCTION.

LEVEL SPREADER
NTS

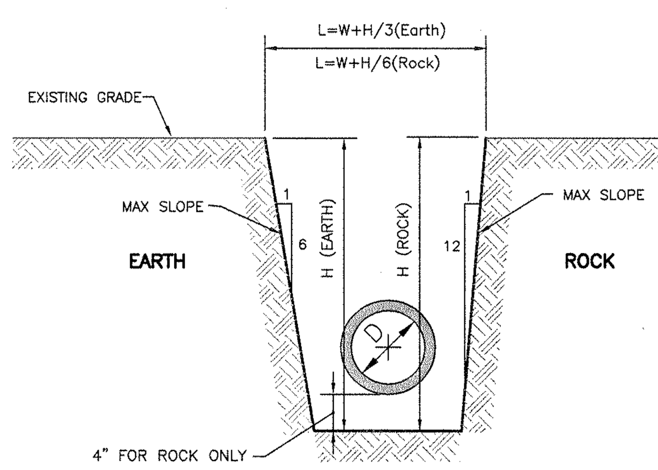

PIPE EMBEDMENT ZONE WIDTH SCHEDULE FOR PIPE MATERIAL OTHER THAN HDPE

INSIDE DIA. OF PIPE (D)	6" or less	8'	10"-12"	14"-18"	20"-30"	36"	
EMBEDMENT ZONE WIDTH (W)	2'- 0"	2'-6"	3'- 0"	3'- 6"	4'- 0"	4'-6"	
INSIDE DIA. OF PIPE (D)	48"	54"	60"	66"	72"	78"	84"
EMBEDMENT ZONE WIDTH (W)	6'- 0"	6'- 6"	7'- 0"	7'- 6"	8'- 0"	9'- 0"	9'- 6" 10'- 0"

TRENCH EXCAVATION AND BACKFILL NOTES
1. THE MAXIMUM DRY DENSITIES SHALL BE DETERMINED IN ACCORDANCE WITH ASTM DESIGNATION D1557. THE MINIMUM PERCENTAGE OF COMPACTION TO BE ACHIEVED BY THE CONTRACTOR IN THE VARIOUS ZONES IS AS FOLLOWS:

	PIPE MATERIAL	LOCATION	INITIAL COMPACTION
SURFACE ZONE	ALL	ALL	95%
TRENCH BACKFILL ZONE			90%
PIPE EMBEDMENT ZONE			95%

THE MINIMUM COMPACTION IN EMBANKMENTS SHALL BE 90%

2. THE PIPE EMBEDMENT ZONE WIDTH AND THE MAXIMUM TRENCH WIDTH SHALL NOT EXCEED THE PERMISSIBLE WIDTHS SHOWN. IF THE PERMISSIBLE WIDTH IS EXCEEDED, THE PIPE SHALL BE INSTALLED IN A HIGHER CLASS BEDDING THAN SHOWN ON THIS DRAWING OR THE SPECIFIED PIPE SHALL BE REPLACED WITH PIPE OF GREATER CRUSHING STRENGTH OR BOTH, TO ACHIEVE SUITABLE CONDITIONS.
3. SUITABLE MATERIAL FROM EXCAVATION SHALL BE FREE FROM OBJECTIONABLE QUANTITIES OF ORGANIC MATTER, CLAY, TREES, STUMPS, FROZEN MATERIAL, RUBBLE, CINDERS, ROCKS, AND OTHER MATERIALS CONSIDERED DELETERIOUS BY THE ENGINEER AND SHALL NOT HAVE FINES IN EXCESS OF 10 PERCENT PASSING THE NO. 200 SIEVE NOR STONE OR GRAVEL LARGER THAN 2 INCHES.

TRENCH EXCAVATION
NTS

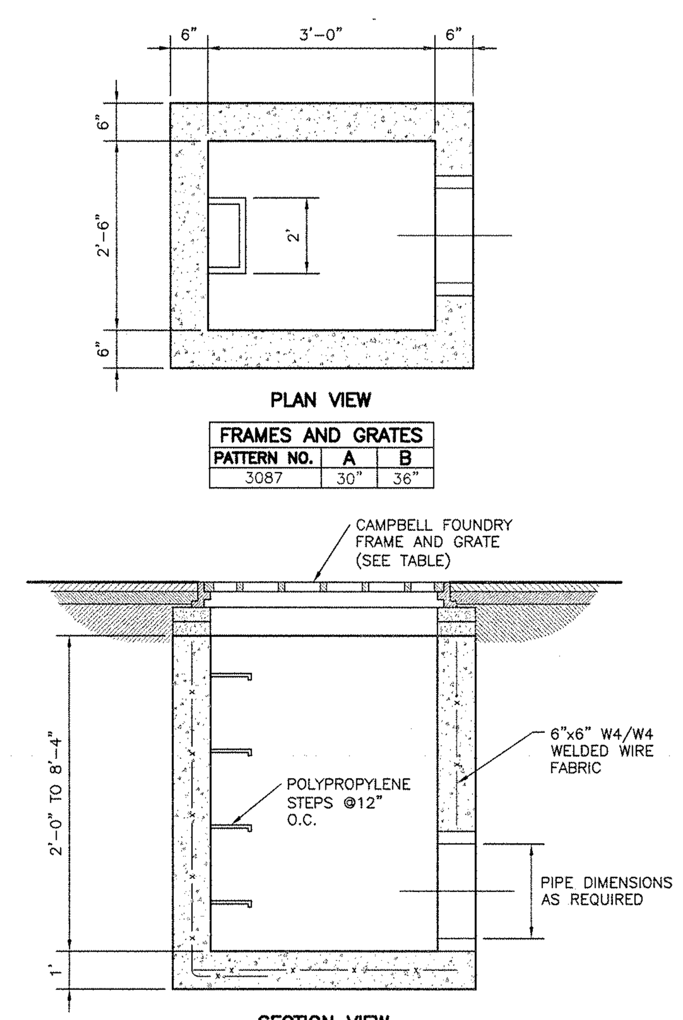

FRAMES AND GRATES

PATTERN NO.	A	B
3087	30"	36"

FIELD INLET CATCH BASIN
NTS

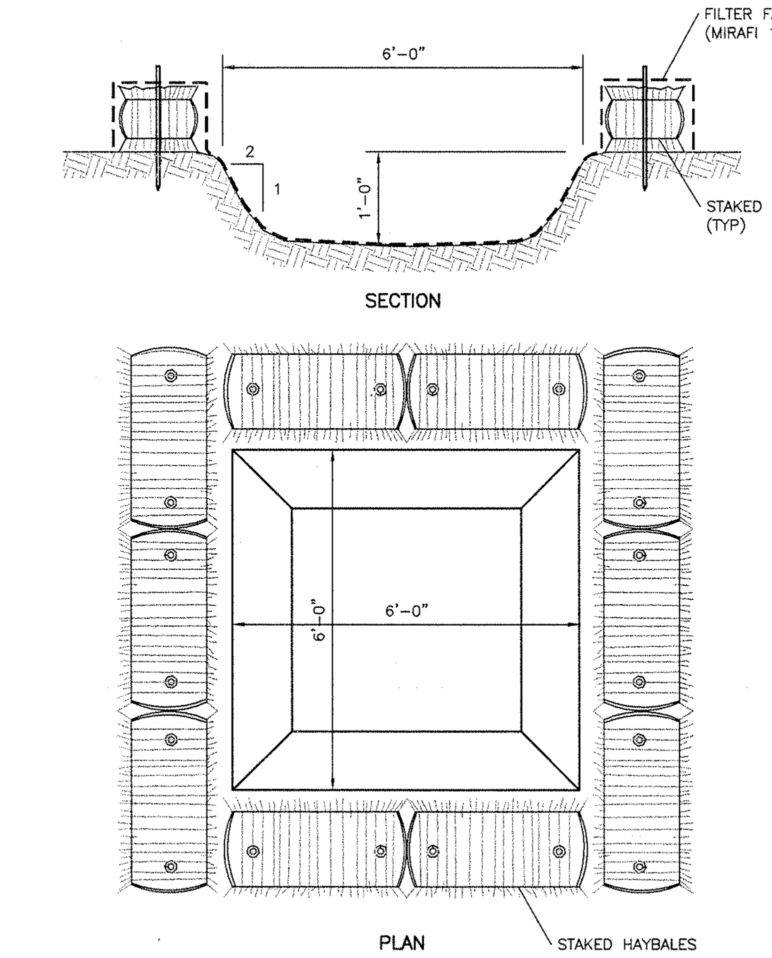

TEMPORARY CONCRETE WASH
NTS

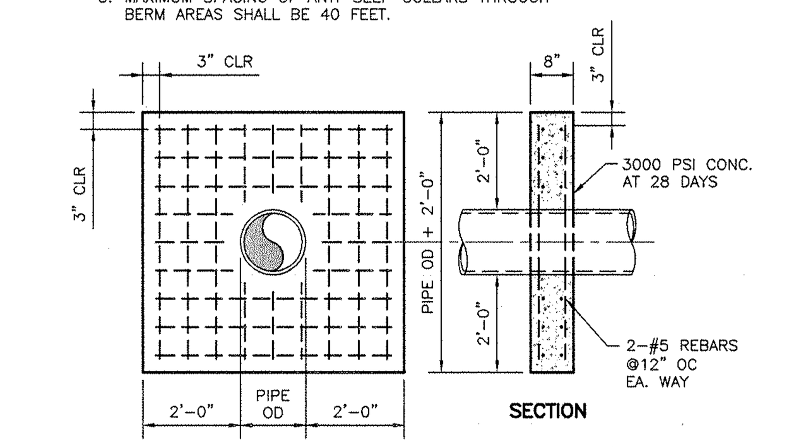

NOTES
1. PRIOR TO CONSTRUCTION OF COLLAR, THE OUTSIDE OF THE PIPE SHALL BE CLEANED.
2. ALL REINFORCEING STEEL SHALL BE GRADE 40.

ANTI-SEEP COLLAR
NTS

GENERAL NOTES
1. AFTER FINAL GRADES ARE ESTABLISHED, DISTURBED AREAS SHALL BE COVERED WITH FOUR INCHES OF TOPSOIL AND PLANTED AS SHOWN ON THE PLAN.
2. TREES, ROOT SYSTEMS AND OTHER VEGETATION REMOVED FOR CONSTRUCTION PURPOSES SHALL BE CHIPPED OR REMOVED FROM SITE. NO ON-SITE BURIAL OR BURNING SHALL BE PERMITTED.
3. THE CONTRACTOR OR CONSTRUCTION MANAGER SHALL CONTACT THE OWNERS OF ALL UTILITIES AFFECTING THE SITE PRIOR TO THE START OF CONSTRUCTION. IT IS THE CONTRACTOR'S RESPONSIBILITY TO ASCERTAIN THE EXACT LOCATION OF UTILITIES FROM THE OWNERS PRIOR TO CONSTRUCTION. UNDERGROUND UTILITIES CALL CENTER OF NEW YORK (800-245-2828).
4. IT SHALL BE THE CONTRACTOR'S RESPONSIBILITY TO TAKE THOSE STEPS NECESSARY TO PREVENT ILLEGAL DUMPING TO TAKE PLACE ON THE SITE. ANY MATERIAL FOUND UNSATISFACTORY TO THE ENGINEER WILL BE REMOVED FROM THE SITE AT THE CONTRACTOR'S EXPENSE.

EROSION CONTROL NOTES
1. PRIOR TO THE START OF CONSTRUCTION EROSION CONTROL DEVICES SHALL BE IN PLACE AS SHOWN ON THESE PLANS.
2. FINAL GRADES SHALL BE ESTABLISHED AS SOON AS POSSIBLE AND TOP SOILED AND SEEDED TO PROVIDE A TURF, WHICH WILL STABILIZE SLOPES AND PREVENT EROSION.
3. SLOPES TO REMAIN OPEN FOR MORE THAN THREE WEEKS SHALL BE PROTECTED WITH TEMPORARY SEEDING OR STAKED NETTING.
4. EROSION CONTROL DEVICES SHALL BE INSPECTED AFTER EACH RAINFALL AND SHALL BE CLEANED, REPAIRED OR REPLACED AS NECESSARY.
5. ALL EROSION CONTROL MEASURES SHALL BE INSTALLED AND MAINTAINED IN ACCORDANCE WITH WESTCHESTER COUNTY BEST MANAGEMENT PRACTICES MANUAL FOR EROSION AND SEDIMENT CONTROL.
6. THE ENGINEER MAY AT HIS DISCRETION REQUIRE ADDITIONAL EROSION CONTROL MEASURES THROUGHOUT CONSTRUCTION TO MITIGATE UNFORESEEN EROSION AND SILTATION.

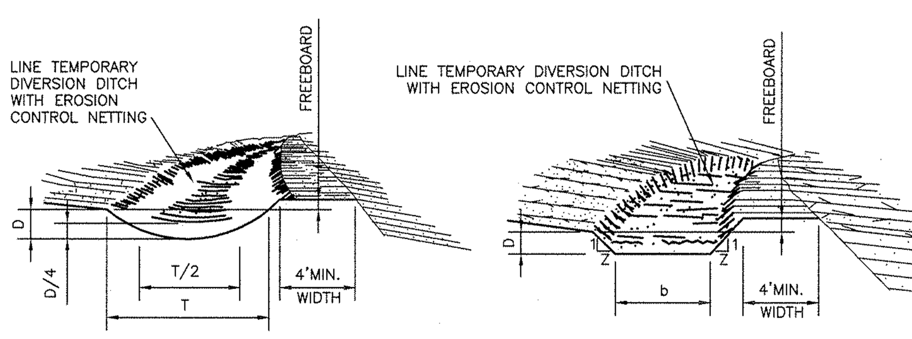

PARABOLIC CROSS-SECTION

TRAPEZOIDAL CROSS-SECTION

CONSTRUCTION SPECIFICATIONS
1. ALL TREES, BRUSH, STUMPS, OBSTRUCTIONS, AND OTHER OBJECTIONABLE MATERIAL SHALL BE REMOVED AND DISPOSED OF SO AS NOT TO INTERFERE WITH THE PROPER FUNCTIONING OF THE DIVERSION.
2. THE DIVERSION SHALL BE EXCAVATED OR SHAPED TO LINE, GRADE, AND CROSS SECTION AS REQUIRED TO MEET THE CRITERIA SPECIFIED HEREIN, AND BE FREE OF BANK PROJECTIONS OR OTHER IRREGULARITIES WHICH WILL IMPEDE NORMAL FLOW.
3. FILLS SHALL BE COMPACTED AS NEEDED TO PREVENT UNEQUAL SETTLEMENT THAT WOULD CAUSE DAMAGE IN THE COMPLETE DIVERSION.
4. ALL EARTH REMOVED AND NOT NEEDED IN CONSTRUCTION SHALL BE SPREAD OR DISPOSED OF SO THAT IT WILL NOT INTERFERE WITH THE FUNCTIONING OF THE DIVERSION.
5. STABILIZATION SHALL BE DONE ACCORDING TO THE APPROPRIATE STANDARD AND SPECIFICATIONS FOR VEGETATIVE PRACTICES.
   A. FOR DESIGN VELOCITIES OF LESS THAN 3.5 FT/SEC, SEEDING AND MULCHING MAY BE USED FOR THE ESTABLISHMENT OF THE VEGETATION. IT IS RECOMMENDED THAT, WHEN CONDITIONS PERMIT, TEMPORARY DIVERSIONS OR OTHER MEANS SHOULD BE USED TO PREVENT WATER FROM ENTERING THE DIVERSION DURING THE ESTABLISHMENT OF THE VEGETATION.
   B. FOR DESIGN VELOCITIES OF MORE THAN 3.5 FT/SEC, THE DIVERSION SHALL BE STABILIZED WITH SOD, WITH SEEDING PROTECTED BY JUTE OR EXCELSIOR MATTING OR WITH SEEDING AND THE VEGETATION IS ESTABLISHED.

TEMPORARY DIVERSION DITCH
NTS

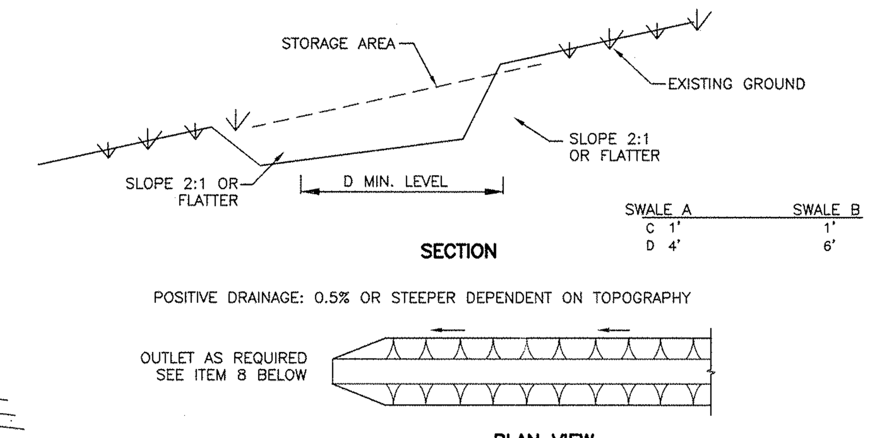

	SWALE A	SWALE B
C	1'	1'
D	4'	6'

POSITIVE DRAINAGE: 0.5% OR STEEPER DEPENDENT ON TOPOGRAPHY

CONSTRUCTION SPECIFICATIONS
1. ALL TEMPORARY SWALES SHALL HAVE UNINTERRUPTED POSITIVE GRADE TO AN OUTLET.
2. DIVERTED RUNOFF FROM A DISTURBED AREA SHALL BE CONVEYED TO A SEDIMENT TRAPPING DEVICE.
3. DIVERTED RUNOFF FROM AN UNDISTURBED AREA SHALL OUTLET DIRECTLY INTO AN UNDISTURBED STABILIZED AREA AT NON-EROSIVE VELOCITY.
4. ALL TREES, BRUSH, STUMPS, OBSTRUCTIONS, AND OTHER OBJECTIONABLE MATERIAL SHALL BE REMOVED AND DISPOSED OF SO AS NOT TO INTERFERE WITH THE PROPER FUNCTIONING OF THE SWALE.
5. THE SWALE SHALL BE EXCAVATED OR SHAPED TO LINE, GRADE, AND CROSS SECTION AS REQUIRED TO MEET THE CRITERIA SPECIFIED HEREIN AND BE FREE OF BANK PROJECTIONS OR OTHER IRREGULARITIES WHICH WILL IMPEDE NORMAL FLOW.
6. FILLS SHALL BE COMPACTED BY EARTH MOVING EQUIPMENT.
7. ALL EARTH REMOVED AND NOT NEEDED FOR CONSTRUCTION SHALL BE PLACED SO THAT IT WILL NOT INTERFERE WITH THE FUNCTIONING OF THE SWALE.
8. PERIODIC INSPECTION AND REQUIRED MAINTENANCE MUST BE PROVIDED AFTER EACH RAIN EVENT.
9. STABILIZATION SHALL BE AS PER THE FLOW CHANNEL STABILIZATION CHART BELOW.

TYPE OF TREATMENT	CHANNEL GRADE	A(5 AC. OR LESS)	B(5 AC. -10AC)
1	0.5%-3.0%	SEED AND STRAW MULCH	SEED AND STRAW MULCH
2	3.1%-5.0%	SEED AND STRAW MULCH	SEED USING JUTE OR EXCELSIOR
3	5.1%-8.0%	SEED WITH JUTE OR EXCELSIOR SOD	LINED WITH 4-8" RIPRAP OR RECYCLED CONCRETE EQUIVALENT
4	8.1%-20%	LINED WITH 4-8" RIPRAP	ENGINEERED DESIGN

TEMPORARY SWALE
NTS

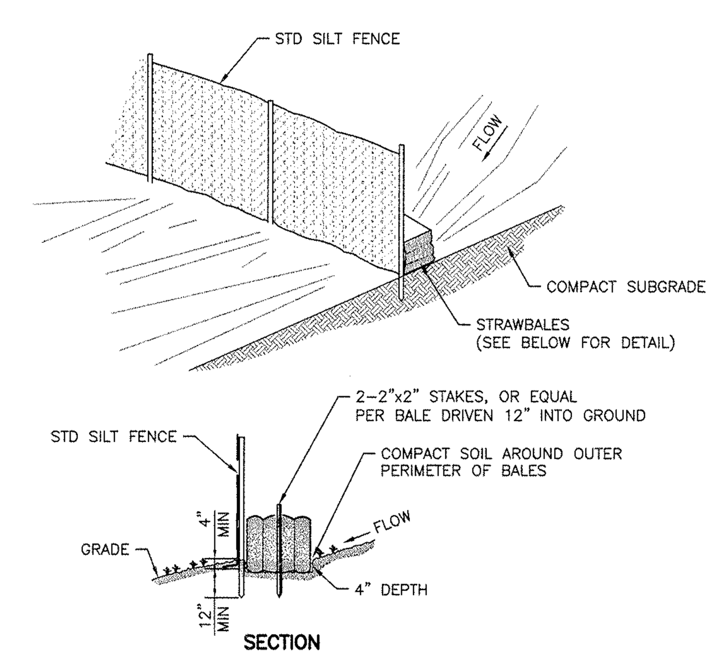

HAYBALES WITH SILT FENCING
(FOR WETLAND AREAS)
NTS

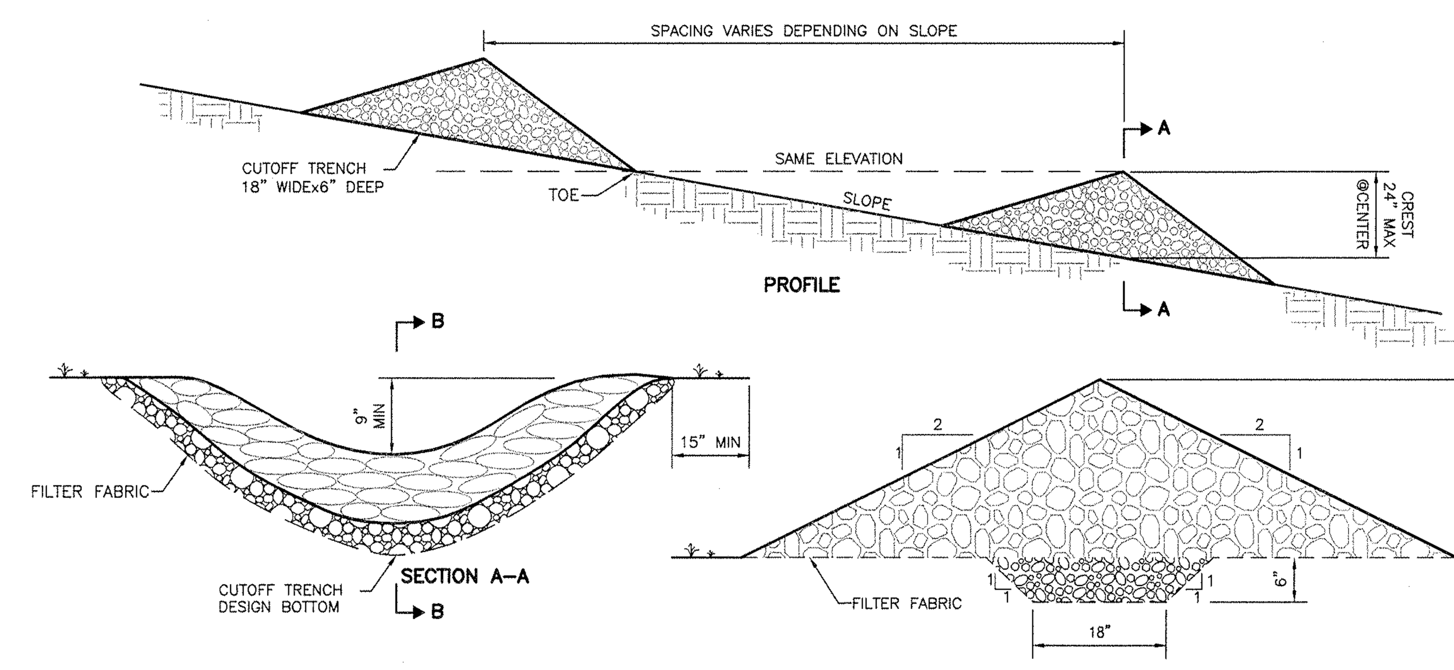

CONSTRUCTION SPECIFICATIONS
1. STONE WILL BE PLACED ON A FILTER FABRIC FOUNDATION TO THE LINES, GRADES AND LOCATIONS SHOWN IN THE PLAN.
2. SET SPACING OF CHECK DAMS TO ASSUME THAT THE ELEVATIONS OF THE CREST OF THE DOWNSTREAM DAM IS AT THE SAME ELEVATION OF THE TOE OF THE UPSTREAM DAM.
3. EXTEND THE STONE A MINIMUM OF 1.5 FEET BEYOND THE DITCH BANKS TO PREVENT CUTTING AROUND THE DAM.
4. PROTECT THE CHANNEL DOWNSTREAM OF THE LOWEST CHECK DAM FROM SCOUR AND EROSION WITH STONE OR LINER AS APPROPRIATE.
5. ENSURE THAT CHANNEL APPURTENANCES SUCH AS CULVERT ENTRANCES BELOW CHECK DAMS ARE NOT SUBJECT TO DAMAGE OR BLOCKAGE FROM DISPLACED STONE.
6. MAXIMUM DRAINAGE AREA 2 ACRES.

CHECK DAM
NTS

ARCH 0 1 2 3
ENGRG 0 1 2 3
REDUCTION RATIO

REV	REVISION	DWN	DES	CHKD	DATE

ORANGE AND ROCKLAND UTILITIES, INC.
PEARL RIVER NEW YORK

HARTLEY ROAD SUBSTATION

CONSTRUCTION DETAILS

ENGINEERING REVIEW		
DEPT.	SIGNATURE	DATE
CIVIL/SURVEY	(signature)	11/7/11
TELECOM/MET.		
TRANS & SUB.	A. Thomas	11/8/11
RELAY		

DWN JYP · DES FM · CHKD WCU · DESIGN REVIEW · DATE 08/31/11

APPROVED / DATE: ☐ INFORMATION ☐ COMMENTS ☐ BID ☐ CONSTRUCTION ☒ PERMIT

SCALE	FILE NO.	DRAWING NUMBER			SHEET	REV.
NONE		K	F	6427	9 OF 12	A

CMX — W. CHARLES UTSCHIG, JR. PROFESSIONAL ENGINEER N.Y. LIC. No. 62303

ORFRMF.DWG
DATE: 00 TIME: 000

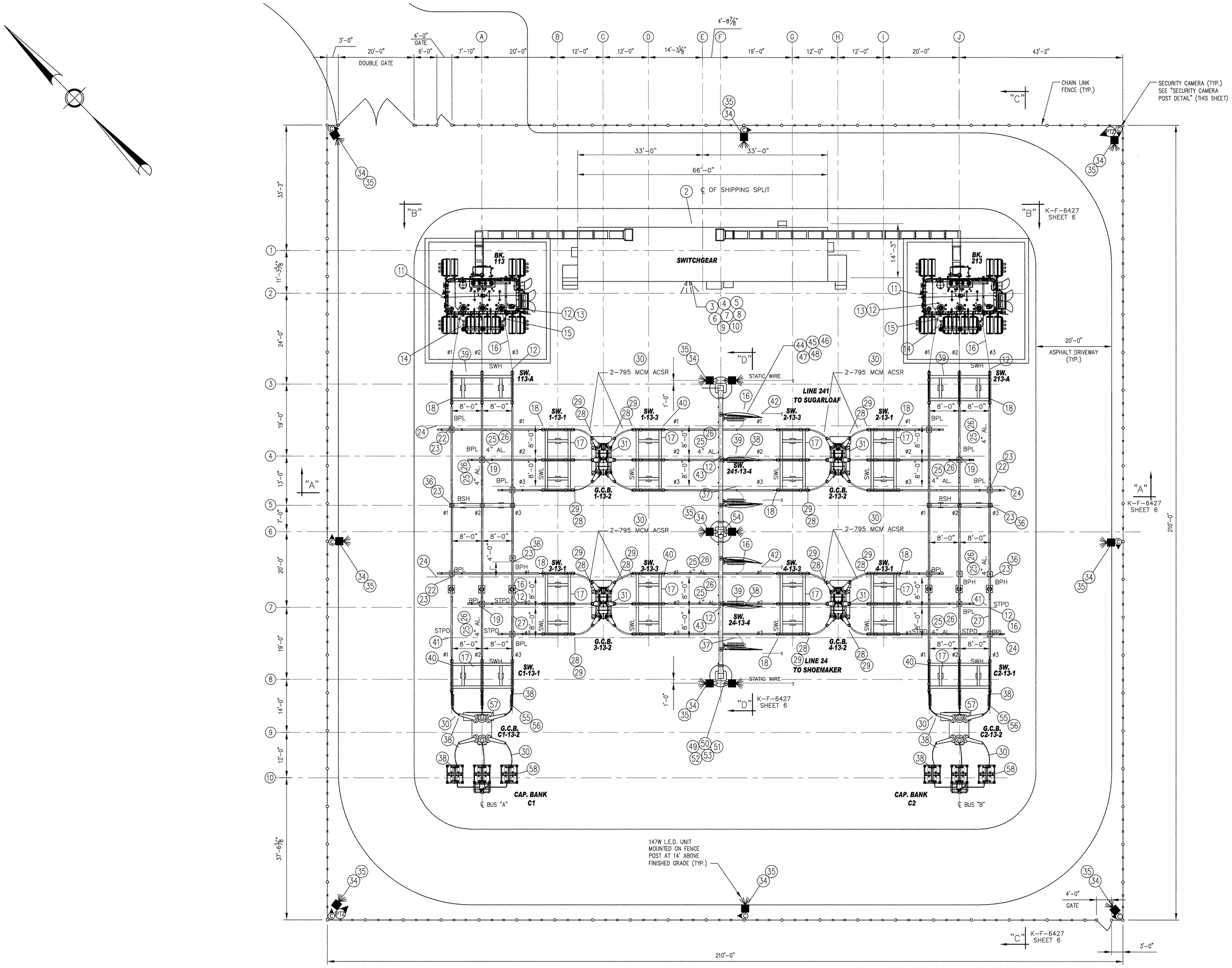

PLAN

SCALE: 3/32"=1'-0"

LEGEND:

- SWH HIGH BUS SWITCH
- SWL LOW BUS SWITCH
- BPL LOW BUS SUPPORT
- BPH HIGH BUS SUPPORT
- STPD BUS POTENTIAL TRANSFORMER
- ø# PHASE NUMBER
- PT2 PAN, TILT, ZOOM CAMERA
- C FIXED CAMERA, I.R. ILLUMINATOR, MOTION DETECTOR & LOUD SPEAKER
- LIGHT

NOTES:

1. ALL BUS CONDUCTORS TO BE 4" DIA. ALUMINUM UNLESS OTHERWISE NOTED.

REV	REVISION	DWN	DES	CHKD	DATE

ORANGE AND ROCKLAND UTILITIES, INC.
PEARL RIVER NEW YORK

ENGINEERING REVIEW		
DEPT.	SIGNATURE	DATE
CIVIL/SURVEY	M Homewood	11/8/11
TELECOM/MET.		
TRANS & SUB.	A Thomas	11/8/11
RELAY		
DWN. J.M./H.S.	DES	CHKD
DESIGN REVIEW		DATE

APPROVED: [signature] DATE: 11/8/11

- ☐ PERMIT
- ☐ BID
- ☐ CONSTRUCTION
- ☐ RECORD
- ☒ PERMIT

HARTLEY ROAD SUBSTATION

ELECTRICAL PLAN

SCALE	STATION NO.	DRAWING NUMBER			SHEET	REV.
3/32" = 1'=0"	0013	K	F	6427	10 OF 12	A

ARCH 0 1 2 3
ENGRG 0 1 2 3

I:\Tsdd_WORKREQ\CIVIL\Hartley\06017C Hartley Road Substation - Al Turi Site - Tom B_Planning Board Package Drawings\K6427S10.DWG, 11/8/2011 1:54:40 PM

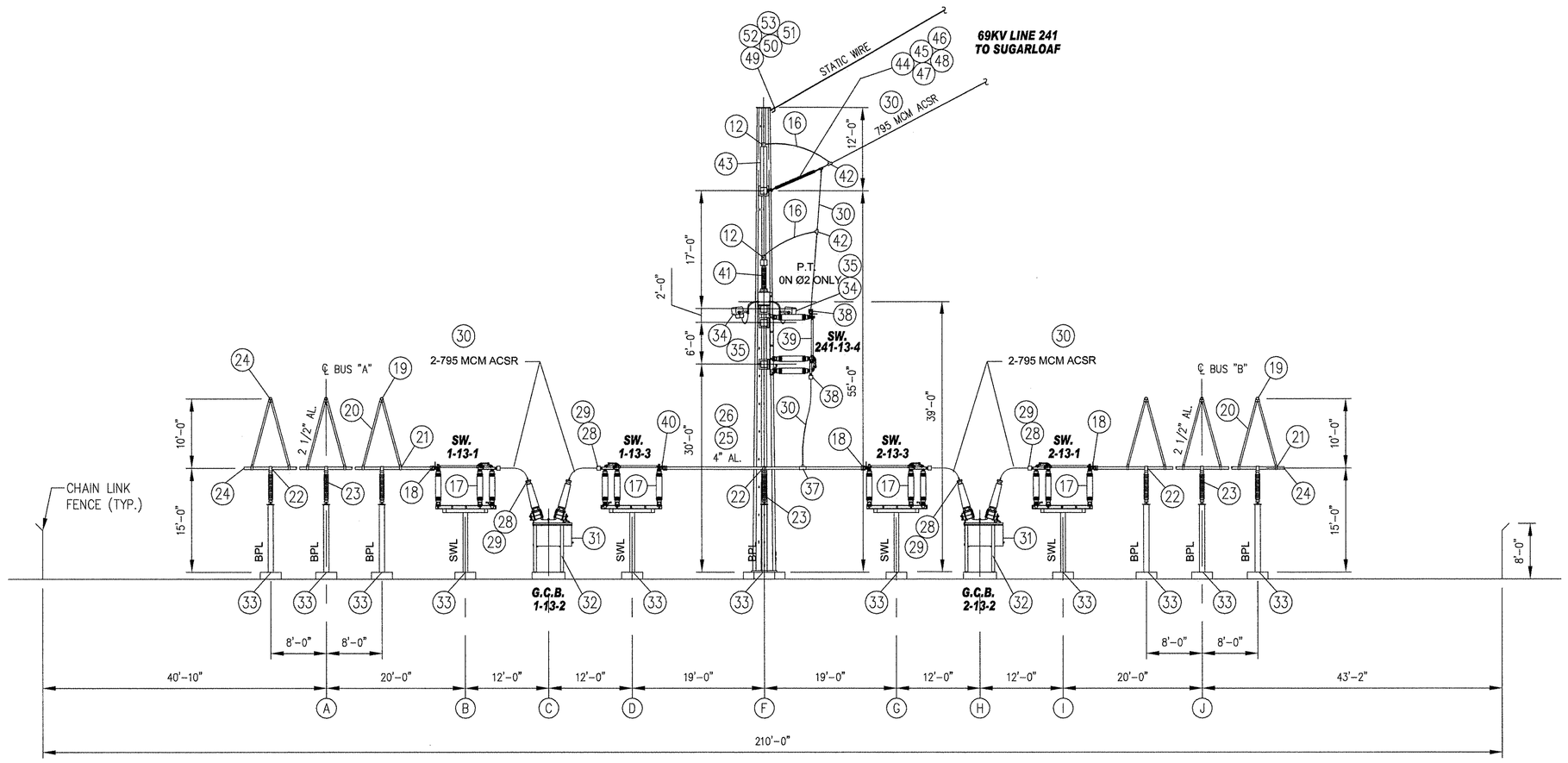

SECTION A-A

SCALE: 3/32" = 1'-0"

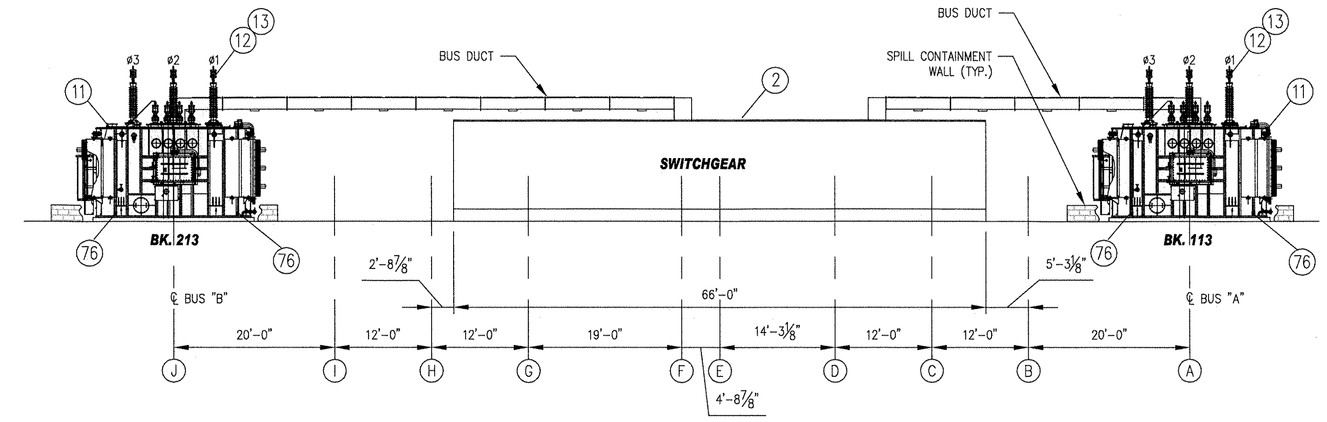

SECTION B-B

SCALE: 3/32" = 1'-0"

ITEM	QUAN.	MFR.	DESCRIPTION
1.	AS REQ.	UNISTRUT	PIERCED CHANNEL
2.	2	——	8"X 28 X 1/2" THK. (SEE DWG.# K-F-6447)
3.	2	HAEFELY TRENCH	CAPACITOR VOLTAGE TRANSFORMER, TYPE UT5-350-69
4.	AS REQ.	——	1 1/2" G.I.
5.	4	C.H.	1 1/2" ELL CAT. #LB57
6.	6	MYERS-SCRU-TITE	1" HUB CAT #ST3
7.	4	BULL DOG	SAFETY SWITCH CAT. #FR321
8.	2	HOFFMAN	CABINET CAT. #A202408LP
9.	2	MYERS-SCRU-TITE	4" HUB CAT. #ST10
10.	AS REQ.	——	4" G.I.
11.	2	MYERS-SCRU-TITE	1 1/2" HUB CAT. #ST5
12.	2	C.H.	4" ELL CAT. #LB107
13.	2	C.H.	4" ELL CAT. #LL107

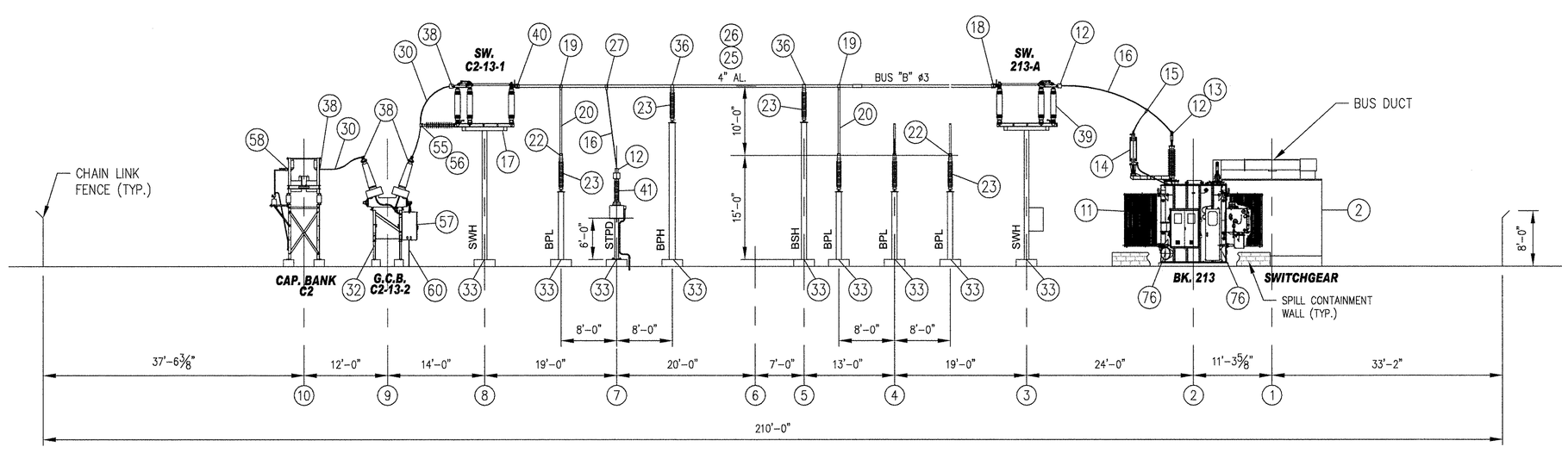

SECTION C-C

SCALE: 3/32" = 1'-0"

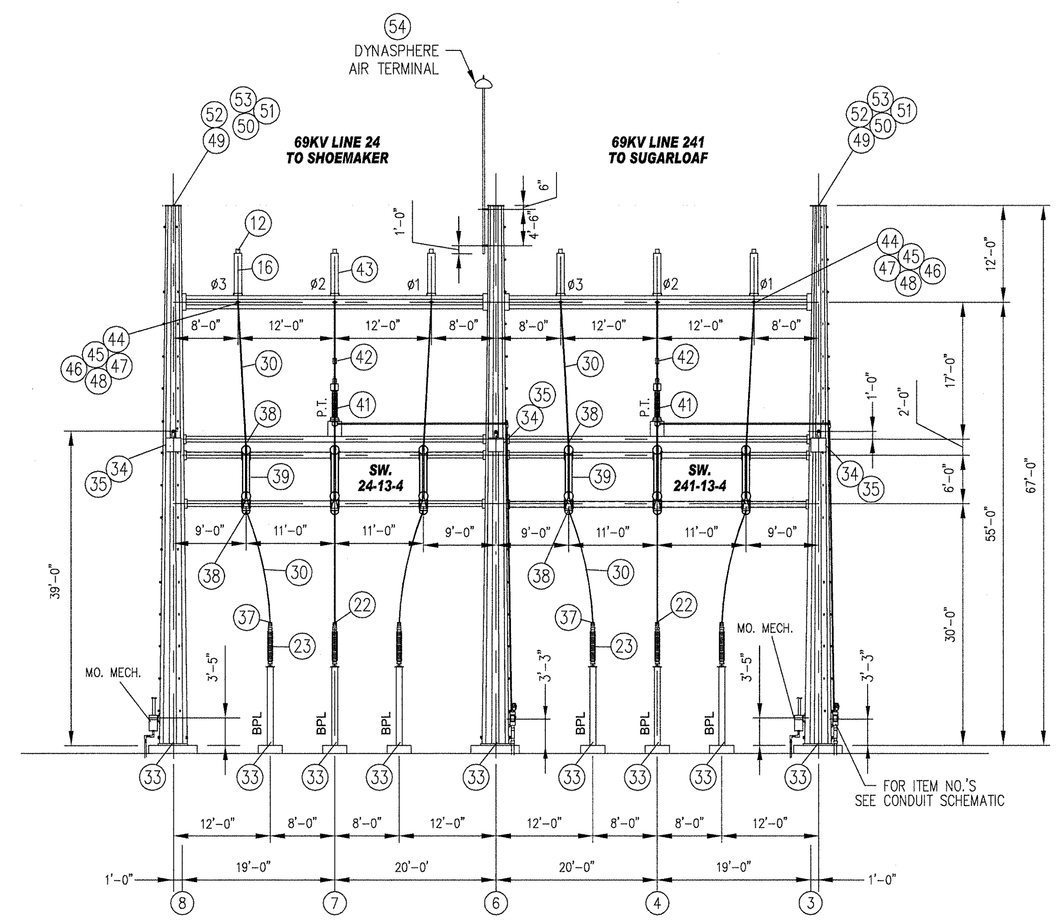

SECTION D-D

SCALE: 3/32" = 1'-0"

LEGEND:

- SWH HIGH BUS SWITCH
- SWL LOW BUS SWITCH
- BPL LOW BUS SUPPORT
- BPH HIGH BUS SUPPORT
- BSH HIGH BUS SUPPORT
- STPD BUS POTENTIAL TRANSFORMER
- Ø# PHASE NUMBER

REV	REVISION	DWN	DES	CHKD	DATE

ORANGE AND ROCKLAND UTILITIES, INC.
PEARL RIVER NEW YORK

ENGINEERING REVIEW		
DEPT.	SIGNATURE	DATE
CIVIL/SURVEY	M Homewick	11/8/11
TELECOM/MET.		
TRANS & SUB.	[illegible]	11/8/11
RELAY		
DWN. J.M./H.S.	DES	CHKD
DESIGN REVIEW		DATE

APPROVAL DATE
☐ PERMIT
☐ BID
☐ CONSTRUCTION
☐ RECORD
☒ PERMIT

HARTLEY ROAD SUBSTATION

ELECTRICAL ELEVATIONS

SCALE	STATION NO.	DRAWING NUMBER			SHEET	REV
3/32" = 1'-0"	0013	K	F	6427	11 OF 12	A

ARCH 0 1 2 3
ENGRG 0 1 2 3

I:\Tsdd_WORKREQ\CIVIL\Hartley\06017C Hartley Road Substation - Al Turi Site - Tom Bi_Planning Board Package Drawings\K6427S11.DWG, 11/8/2011 9:53:23 AM

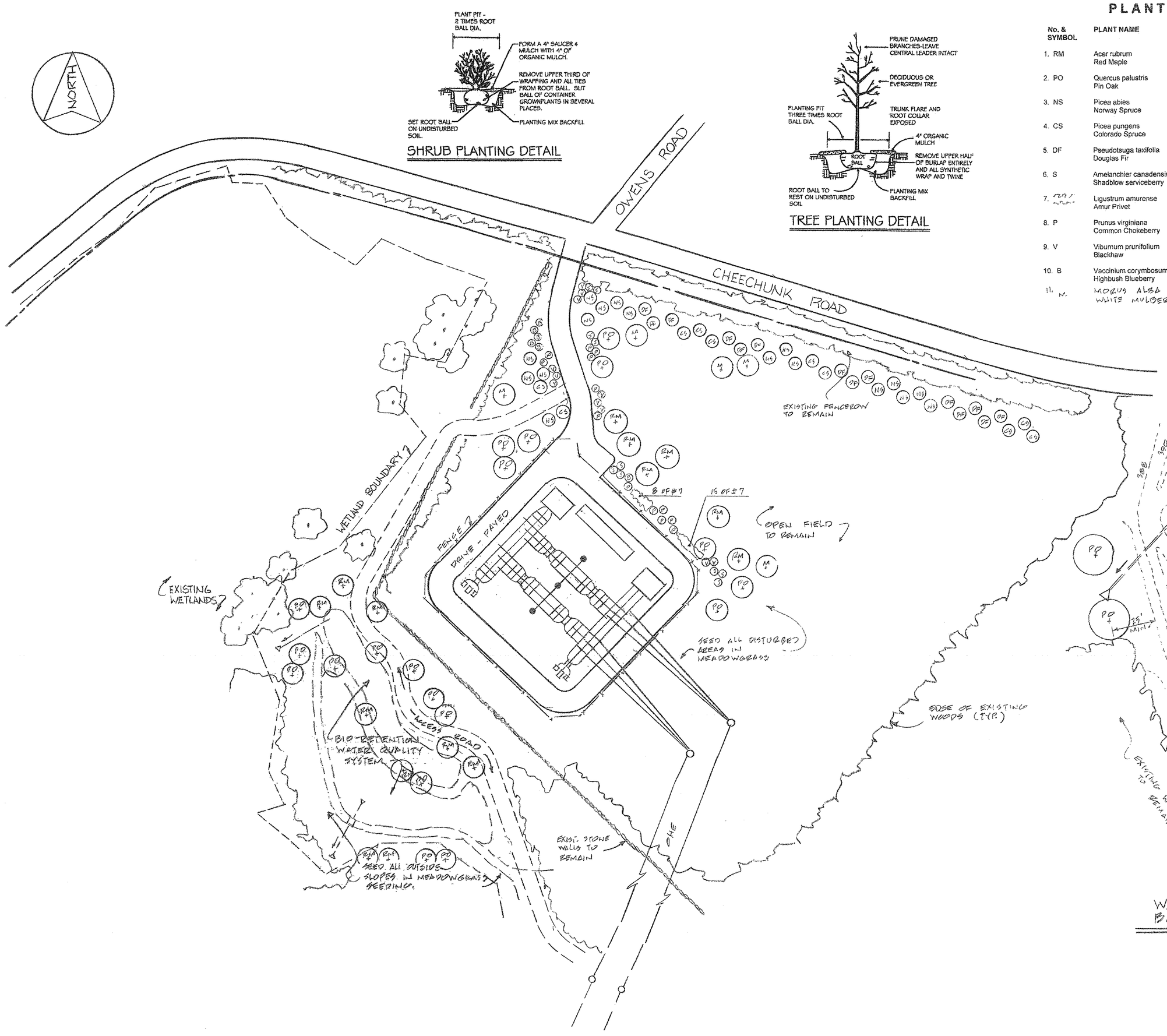

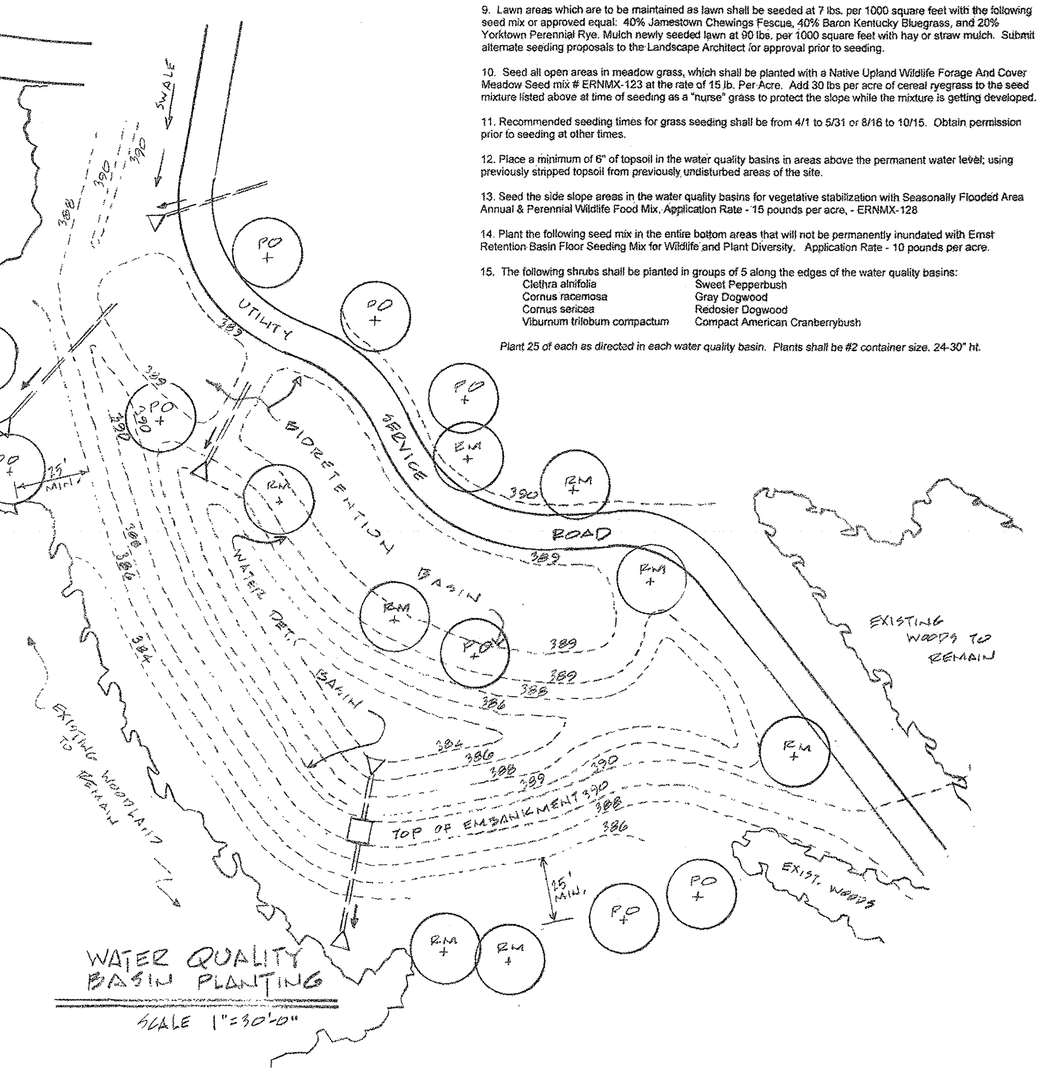

SHRUB PLANTING DETAIL

TREE PLANTING DETAIL

PLANT LIST

No. & SYMBOL	PLANT NAME	QUANTITY	SIZE & REMARKS
1. RM	Acer rubrum Red Maple	15	2 1/2"-3"cal.B&B
2. PO	Quercus palustris Pin Oak	19	2 1/2"-3"cal.B&B
3. NS	Picea abies Norway Spruce	16	7'-8' ht. B&B
4. CS	Picea pungens Colorado Spruce	10	7'-8' ht. B&B
5. DF	Pseudotsuga taxifolia Douglas Fir	14	7'-8' ht. B&B
6. S	Amelanchier canadensis Shadblow serviceberry	8	8'-10'ht. B&B
7. [illegible]	Ligustrum amurense Amur Privet	23	4'-5' ht. B&B Plant 3' o c
8. P	Prunus virginiana Common Chokeberry	14	3'-4' ht., B&B
9. V	Viburnum prunifolium Blackhaw	8	4'-5' ht. B&B
10. B	Vaccinium corymbosum Highbush Blueberry	6	3 1/2'-4' ht., B&B
11. M.	MORUS ALBA WHITE MULBERRY	5	2"-2 1/2" CAL B&B

PLANTING NOTES

1. All plants shall bear the same relationship to finished grade as that which existed in the nursery. All plants shall be oriented at their proposed location to present their best side. This installation shall be carried out under the supervision of the Landscape Architect. Provide 24 hours notice. All plants shall be nursery grown and plants and workmanship shall conform to the "American Standard for Nursery Stock", ANSI-Z 60.1-2004, American Nursery & Landscape Association, latest edition.

2. Mulch all plant beds and trees with a 3" minimum depth of woodchips, pine bark, peat moss or other mulch acceptable to the Landscape Architect. Do not place mulch against tree trunk.

3. Set trees plumb and tamp soil in tree pit. Trees shall be set at level of existing tree crown. Do not place mulch against tree trunk. Deciduous tree trunks shall be wrapped with burlap, or other approved wrap, up to the bottom branches with a 50% overlap. All deciduous plants shall be pruned back 1/4 to 1/3 branch lengths immediately after planting, except that main leaders shall not be cut.

4. Plant pits shall be 3 times root ball diameter for trees and 2 times root ball diameter for shrubs and set root ball on undisturbed soil. Set plants at same level as originally grown on base of undisturbed soil. Remove all existing soil; loosen sides of pit with pick, and backfill with a mixture of one part peat-humus to 4 parts topsoil. Topsoil shall conform to Soil Conservation District standards. Add appropriate quantities of a complete commercial fertilizer (nitrogen, phosphoric acid and potash) in the proportions equivalent to 5-10-5, and bonemeal. Fertilize all plants with 2 to 3 oz. per foot of shrub height and 2 to 3 lbs. per inch of tree trunk of 5-10-5 fertilizer. For evergreen planting, add 1 lb. per 100 square feet of plant bed each of ammonium sulfate and superphosphate. Set root ball on undisturbed bottom of pit. Remove upper half of burlap from root ball.

5. Plants shall be warranted for a period of two years. Replace, in accordance with the drawings and specifications, all plants that are missing, more than 25% dead, which do not develop from planting stock, that appear unhealthy or unsightly and/or have lost their natural shape due to dead branches. Any tree that loses the main leader shall be replaced.

6. No plants existing on the site shall be removed, except for those specifically identified on the drawings for removal. Existing trees in areas proposed in areas proposed for construction for this site can be transplanted to areas on the site in which similar species are specified. Trees and vegetated areas which are in or near construction areas shall be protected with a snow fencing placed around the tree trunk at the drip line of the trees if possible, or maintain a minimum diameter of 10 feet around trees. There shall not be any construction material storage or other disturbance within the drip lines of existing trees to remain. Place 4 inches of wood chips over the root zone to extend to the drip line where fencing must be placed closer than the drip line. Maintain the wood chip protection.

7. All landscape installations shall be maintained on a regular basis, and shall not be allowed to take on an unsightly appearance (except for natural areas which shall be allowed to grow naturally with a minimum of maintenance).

8. Place 4" of topsoil on all lawn areas and 12" of topsoil in all planting beds. Fertilize areas before seeding or sodding with 15 lbs. per 1000 square feet of 10-20-10 fertilizer or approved equivalent. Repeat after 8 weeks. Fertilize lawn areas other than fine lawn areas with 500 lbs. per acre of 10-20-10 commercial fertilizer, and mulch with hay or straw at the rate of 2 tons per acre.

9. Lawn areas which are to be maintained as lawn shall be seeded at 7 lbs. per 1000 square feet with the following seed mix or approved equal: 40% Jamestown Chewings Fescue, 40% Baron Kentucky Bluegrass, and 20% Yorktown Perennial Rye. Mulch newly seeded lawn at 90 lbs. per 1000 square feet with hay or straw mulch. Submit alternate seeding proposals to the Landscape Architect for approval prior to seeding.

10. Seed all open areas in meadow grass, which shall be planted with a Native Upland Wildlife Forage And Cover Meadow Seed mix # ERNMX-123 at the rate of 15 lb. Per Acre. Add 30 lbs per acre of cereal ryegrass to the seed mixture listed above at time of seeding as a "nurse" grass to protect the slope while the mixture is getting developed.

11. Recommended seeding times for grass seeding shall be from 4/1 to 5/31 or 8/16 to 10/15. Obtain permission prior to seeding at other times.

12. Place a minimum of 6" of topsoil in the water quality basins in areas above the permanent water level, using previously stripped topsoil from previously undisturbed areas of the site.

13. Seed the side slope areas in the water quality basins for vegetative stabilization with Seasonally Flooded Area Annual & Perennial Wildlife Food Mix. Application Rate - 15 pounds per acre, - ERNMX-128

14. Plant the following seed mix in the entire bottom areas that will not be permanently inundated with Ernst Retention Basin Floor Seeding Mix for Wildlife and Plant Diversity. Application Rate - 10 pounds per acre.

15. The following shrubs shall be planted in groups of 5 along the edges of the water quality basins:

Clethra alnifolia	Sweet Pepperbush
Cornus racemosa	Gray Dogwood
Cornus sericea	Redosier Dogwood
Viburnum trilobum compactum	Compact American Cranberrybush

Plant 25 of each as directed in each water quality basin. Plants shall be #2 container size, 24-30" ht.

ARCH 0 1 2 3
ENGRG 0 1 2 3

ROBERT G. TORGERSEN, ASLA
LANDSCAPE ARCHITECTURE AND ENVIRONMENTAL SERVICES
3 MAIN DRIVE, NANUET, NY 10954 845) 623 4835 – Fax (845) 627 6622

REV	REVISION	DWN	DES	CHKD	DATE

ORANGE AND ROCKLAND UTILITIES, INC.
PEARL RIVER NEW YORK

ENGINEERING REVIEW		
DEPT.	SIGNATURE	DATE
CIVIL/SURVEY	M Hanewicz	11/8/11
TELECOM/MET.		
TRANS & SUB.	R. Torgersen	11/8/11
RELAY		
DWN R.T.	DES R.T.	CHKD
DESIGN REVIEW		DATE

APPROVED [illegible] DATE 11/8/11
☐ PERMIT
☐ BID
☐ CONSTRUCTION
☐ RECORD
☒ PERMIT

HARTLEY ROAD SUBSTATION

PLANTING PLAN

SCALE	STATION NO.	DRAWING NUMBER			SHEET	REV.
1" = 50'	0013	K	F	6427	12 OF 12	A

I:\Tadd_WORKREQ\CIVIL\Hartley\06017C Hartley Road Substation - Al Turi Site - Tom B_Planning Board Package Drawing\K6427S12.dwg, 11/8/2011 10:01:38 AM

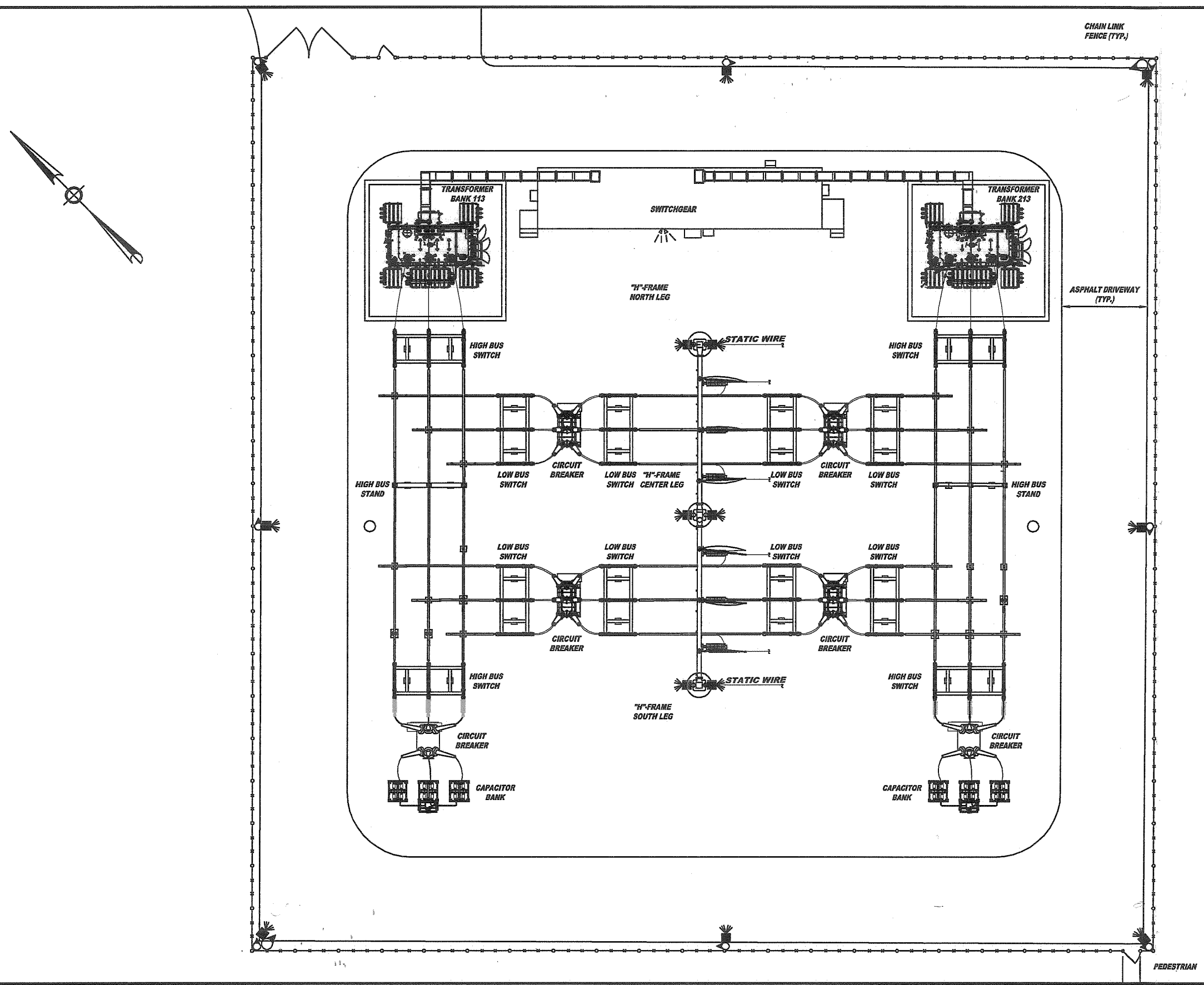

LEGEND

- PTZ — PAN, TILT, ZOOM CAMERA
- C — FIXED CAMERA, I.R. ILLUMINATOR, MOTION DETECTOR & LOUD SPEAKER
- LIGHT

0 150' 300' 600'

Approximate Scale: 1" = 300'

The information included on this graphic representation has been compiled from a variety of sources and is subject to change without notice. Kleinfelder makes no representations or warranties, express or implied, as to accuracy, completeness, timeliness, or rights to the use of such information. This document is not intended for use as a land survey product nor is it designed or intended as a construction design document. The use or misuse of the information contained on this graphic representation is at the sole risk of the party using or misusing the information.

SOURCE:
ORU, OCTOBER 2011.

KLEINFELDER
Bright People. Right Solutions.
www.kleinfelder.com

PROJECT NO.	119978
DRAWN:	10/20/2011
DRAWN BY:	SC
CHECKED BY:	JGC
FILE NAME:	SLC11d259.dwg

SUBSTATION DETAIL PLAN

HARTLEY ROAD SITE
ORANGE & ROCKLAND UTILITIES, INC.
TOWN OF GOSHEN
ORANGE COUNTY, NEW YORK

FIGURE 6

PLOTTED: 20 Oct 2011, 4:11pm, SContreras

CAD FILE: L:\2011\Projects\119978\ LAYOUT: FIG 6